STATE	PROJECT NO.	YEAR	SHEET NO.	TOTAL SHEETS
KANSAS	54-87 K-6657-01	2002	782	1122

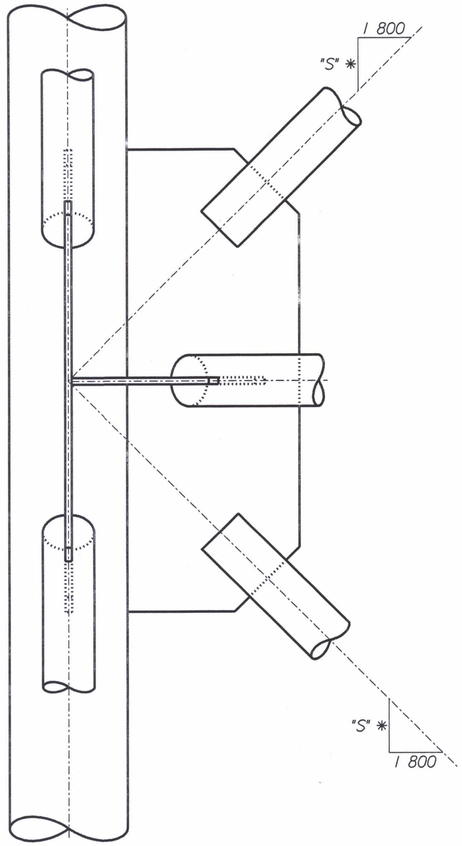

PLAN AT JOINT

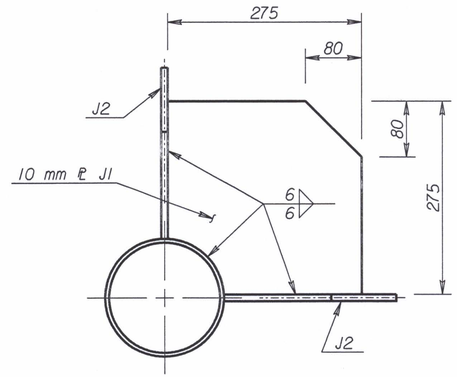

DETAILS ℞ J1

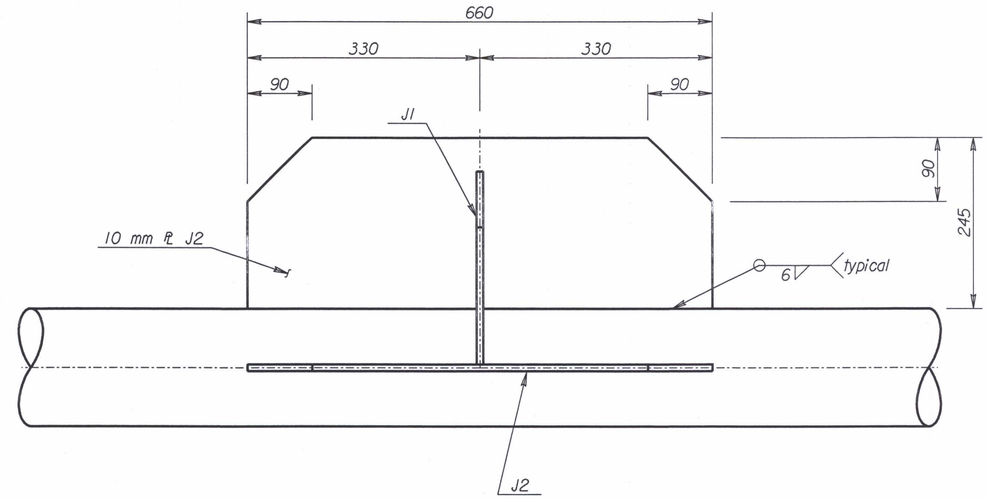

DETAILS ℞ J2

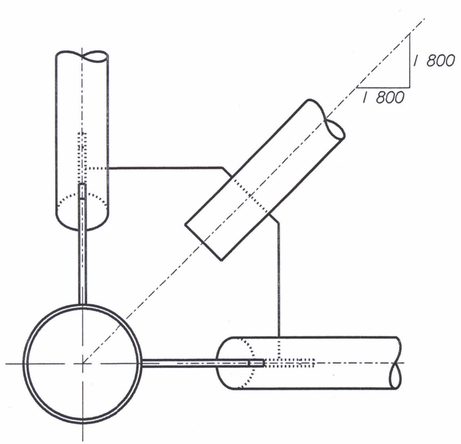

SECTION NEAR JOINT

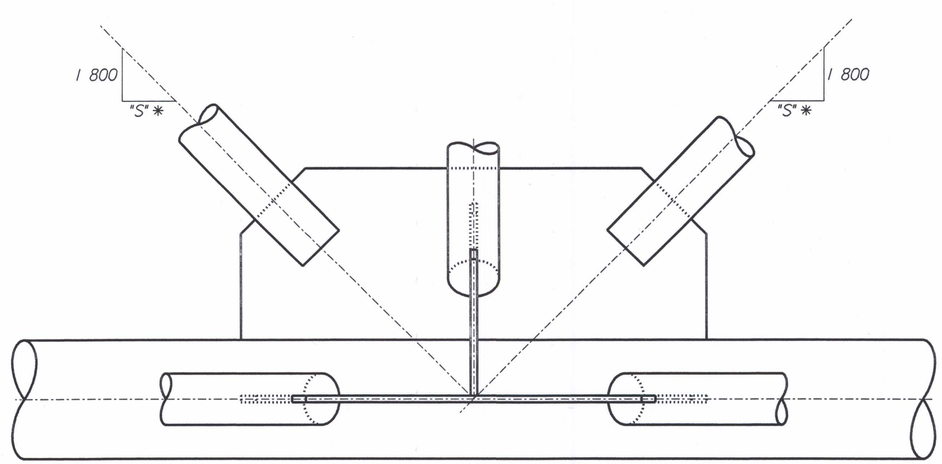

ELEVATION AT JOINT

TYPICAL DETAILS

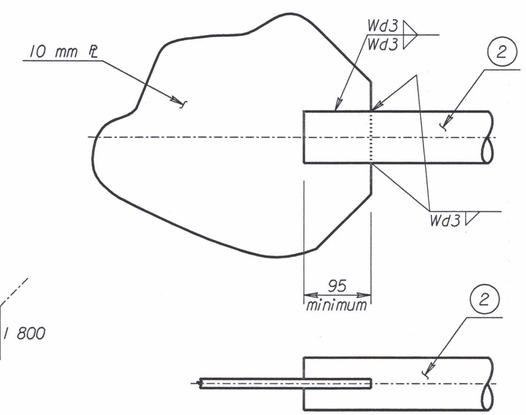

Member 2 * wall thickness	Fillet Weld size Wd3
3.05	5
5.16	
7.01	6

* See "Construction Layout" for wall thickness and "S"

TYPICAL WELDED JOINT

Note: Welded and bolted options may be mixed for a given truss or at a given joint.

STEEL NOT USED.

NO.	DATE	REVISIONS	BY	APP'D

KANSAS DEPARTMENT OF TRANSPORTATION

STANDARD STRUCTURAL SIGN SUPPORTS
SPAN TYPE OVERHEAD
STEEL ALTERNATE
TRUSS JOINT DETAILS (WELDED OPTION)

SL151C-05 SI — SEDGWICK CO.

FHWA APPROVAL		4-10-97	APP'D	Kenneth F. Hurst			
DESIGNED	BFM	DETAILED	KFH	QUANTITIES		CADD	DJE
DESIGN CK.	RDH	DETAIL CK.	RDH	QUAN.CK.		CADD CK.	LES

Std. Base File: sl151csi.dgn - Plot 5
Plotted By: $$USERNAME$$ | Plot Location: $UNIT$
File: $$$$$$$$$$$$$$DGNSPEC$$$$$$$$$$$$$$
Plot Date: $$$$$$$$TIME$$$$$$$$