STATE	PROJECT NO.	YEAR	SHEET NO.	TOTAL SHEETS
KANSAS	54-87 K-6657-01	2002	150	1122

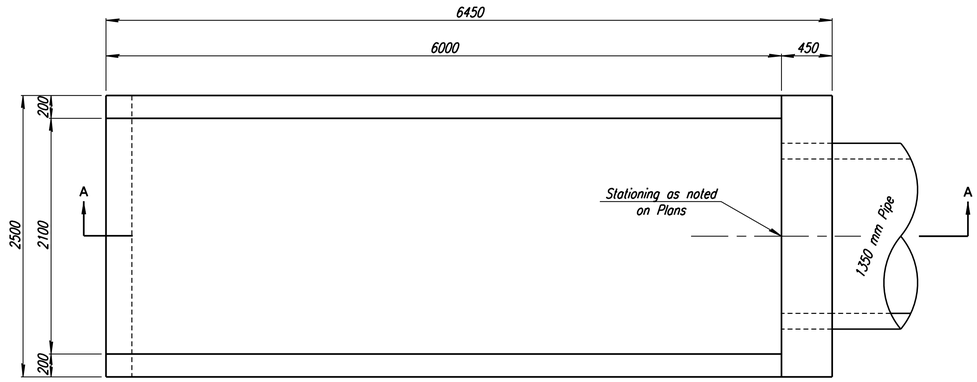

PLAN

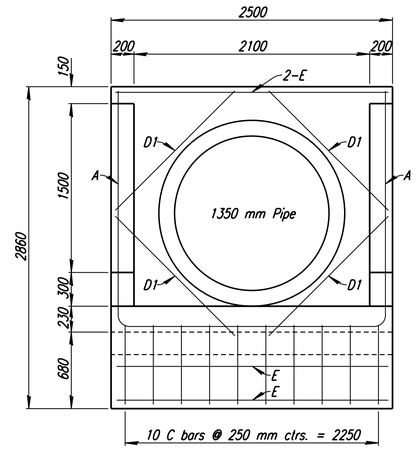

FRONT VIEW

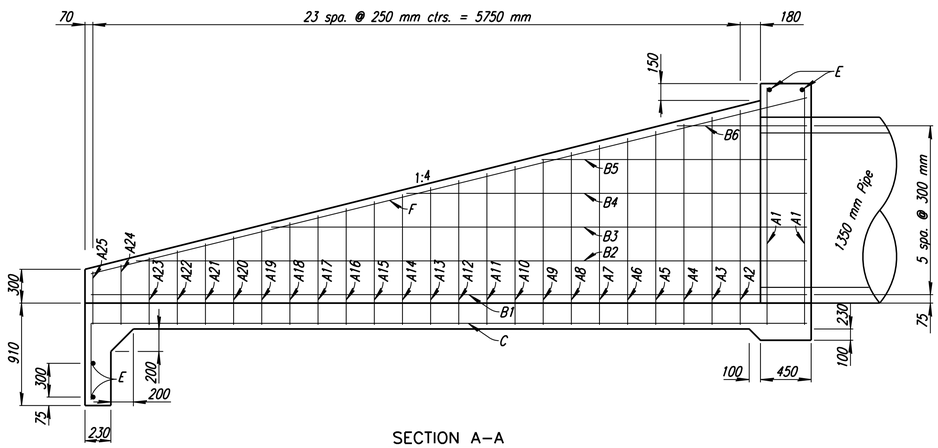

SECTION A–A

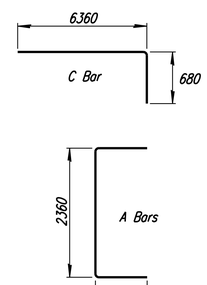

A1	2110
A2	1910
A3	1850
A4	1780
A5	1720
A6	1660
A7	1600
A8	1530
A9	1470
A10	1410
A11	1350
A12	1280
A13	1220
A14	1160
A15	1100
A16	1030
A17	970
A18	910
A19	850
A20	780
A21	720
A22	660
A23	600
A24	530
A25	470

BENDING DIAGRAMS

CONCRETE HEADWALL NOTES

CONCRETE: Bevel all exposed edges with a 19 mm triangular molding or finish with an approved edging tool. Class AAA Concrete (AE) shall have a minimum 28 day compressive strength of 30 MPa.

REINFORCING STEEL: All dimensions relative to reinforcing steel are to centerline of bar unless otherwise noted. All reinforcing steel shall conform to A.S.T.M. designation A615M (Grade 420). End and side clearance to reinforcing to be 50 mm.

PAYMENT: The headwall, exclusive of flapgate, shall be paid for at the unit price bid per each, which price shall be considered full compensation for all materials, labor, tools, equipment and incidentals necessary to complete the work.

RE-BAR SCHEDULE ≠

Mark	Shape	No.	Length	Mass
A1	⌊⌋	2	6580	13.08
A2	⌊⌋	1	6180	6.14
A3	⌊⌋	1	6060	6.02
A4	⌊⌋	1	5920	5.88
A5	⌊⌋	1	5800	5.77
A6	⌊⌋	1	5680	5.65
A7	⌊⌋	1	5560	5.53
A8	⌊⌋	1	5420	5.39
A9	⌊⌋	1	5300	5.27
A10	⌊⌋	1	5180	5.15
A11	⌊⌋	1	5060	5.03
A12	⌊⌋	1	4920	4.89
A13	⌊⌋	1	4800	4.77
A14	⌊⌋	1	4680	4.65
A15	⌊⌋	1	4560	4.53
A16	⌊⌋	1	4420	4.39
A17	⌊⌋	1	4300	4.27
A18	⌊⌋	1	4180	4.15
A19	⌊⌋	1	4060	4.04
A20	⌊⌋	1	3920	3.90
A21	⌊⌋	1	3800	3.78
A22	⌊⌋	1	3680	3.66
A23	⌊⌋	1	3560	3.54
A24	⌊⌋	1	3420	3.40
A25	⌊⌋	1	3300	3.28
B1	——	2	6360	12.64
B2	——	2	5960	11.85
B3	——	2	4760	9.46
B4	——	2	3560	7.08
B5	——	2	2360	4.69
B6	——	2	1160	2.31
C	⌈⌉	10	7040	69.98
D1	——	4	1500	5.96
E	——	4	2420	9.62
F	——	2	6550	13.02
Total Rebars			273	Kg
Concrete			8.06	cu. m

All Concrete Reinforcement to be 13# bars.

≠ For Information Only

RECORD DRAWING

No.	Revisions	By	Date
1			

CITY OF WICHITA

1350 mm HEADWALL DETAILS

SEDGWICK COUNTY

Professional Engineering Consultants, P.A.
303 S. TOPEKA • WICHITA, KANSAS 67202
316-262-2691 • FAX 316-262-3003

Designed by	R.A.S.	Checked by	M.D.G.
Drawn by	R.A.S., G.D.R.	Date April, 2002	Job No. 97362

Dsnr. Oper. GDR Scale: 1:25
I:/1997/97362/As-Builts/dgnts/Sh 150-hdwll350m.dgn Last Rev. 8-20-07 By: gdr