STATE	PROJECT NO.	YEAR	SHEET NO.	TOTAL SHEETS
KANSAS	54-87 K-6657-01	2002	449	1122

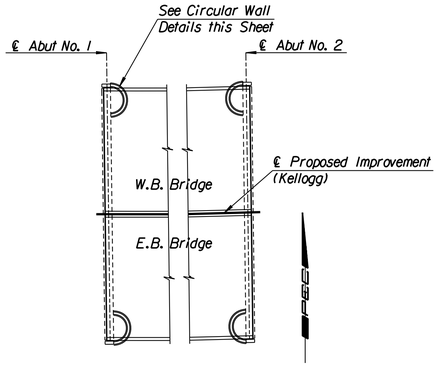

BRIDGE PLAN

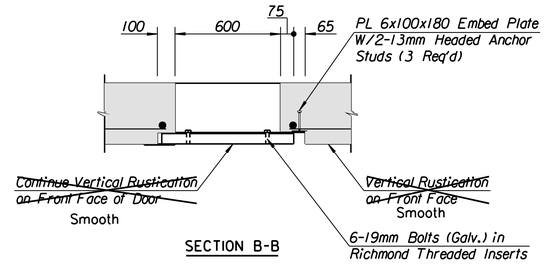

SECTION B-B

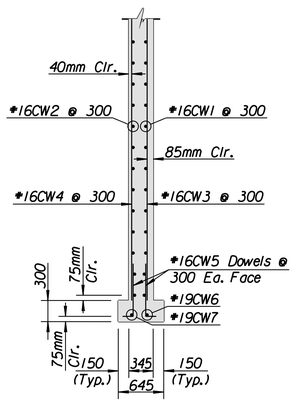

TYPICAL WALL SECTION A-A

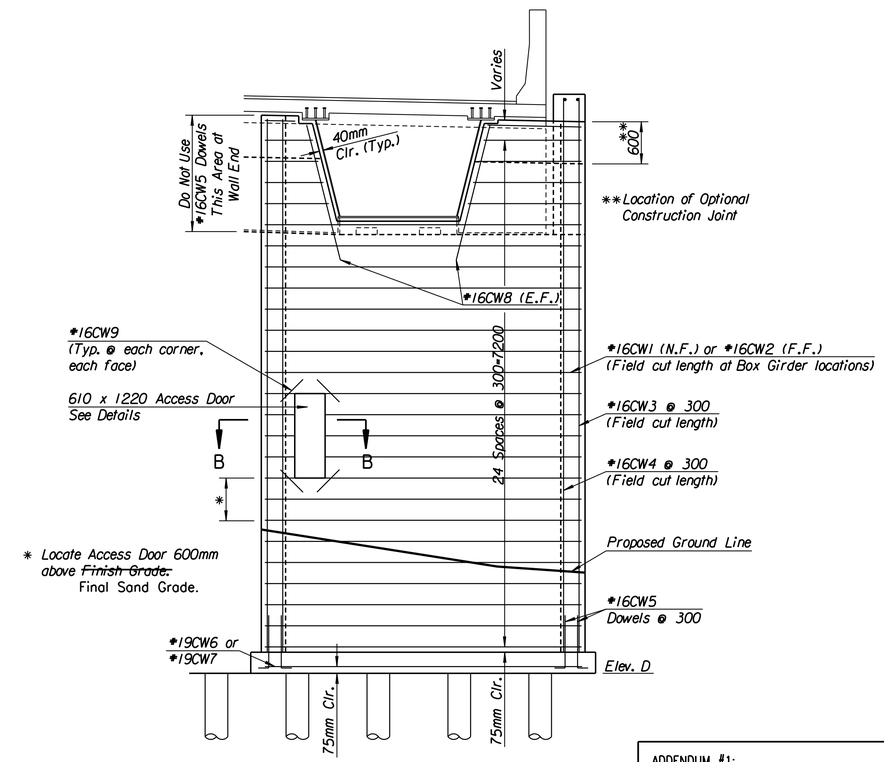

ELEVATION

(Abut. No. 1 W.B. shown Abut. No. 2 similar)

Note:
Bridge Contractor field fitted and attached an angled, galvanized metal strip to cover exposed opening at top of semi-circular room to restrict excessive moisture gaining access to room. Metal strip was attached with screws and sealing compound in a manner that allowed some flexibility of metal strip during bridge structure movement. One (1) metal strip attached per semi-circular room location [four (4) total]. See Field Order 6-14-04.

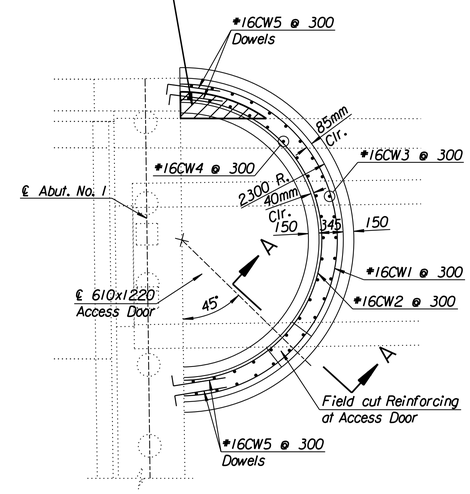

PLAN

(Abut. No. 1 W.B. shown Abut. No. 2 similar)

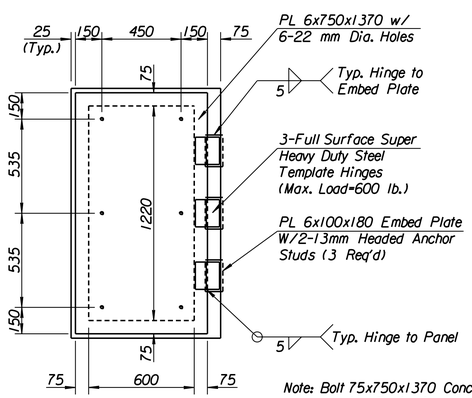

ACCESS DOOR

Note: Bolt 75x750x1370 Concrete Panel with Vertical Rusications to PL 6x750x1370. Reinforce Concrete Door with 150x150-MW10xMW10 Welded Wire Fabric.

ADDENDUM #1:

Sheet 449 and Sheet 579 Add the following notes:

1. The exterior exposed face of the circular walls including the access door shall be a smooth textured surface and stained with the "Surface Coating Finish" in accordance with the specifications. Circular walls shall be measured and paid for at the unit prices bid for "Concrete (Grade 30)(AE) and Reinforcing Steel (Gr. 420). Quantities are included in the Substructure Quantities.

~~Access Door at Circular Wall locations is subsidiary to bid item Reinforced Concrete Circular Walls.~~ Quantities for Circular Walls are listed in the Substructure Quantities on the General Notes sheets. No deductions in Concrete and Reinforcing were made for Access Door openings.

See Circular Wall Dimensions Sheet for Dimensions and Elevations.

RECORD DRAWING

No.	Revisions	By	Date
1			

CITY OF WICHITA
BR. NO. 54-87-19.05 (489) W.B. STA. 15+612.397
BR. NO. 54-87-19.06 (491) E.B. STA. 15+612.397

CIRCULAR WALL DETAILS

MAIZE ROAD

SEDGWICK COUNTY

Professional Engineering Consultants, P.A.
303 S. TOPEKA • WICHITA, KANSAS 67202
316-262-2691 • FAX 316-262-3003

Designed by	RWA	Checked by	RAS	
Drawn by	DRP	Date April, 2002	Job No.	97362

DATE	BY	REFERENCES NOTED
		REFERENCES CHECKED

DSNR: RWA OPER: DRP SCALE: 40 Last Rev: 8-30-07 By: gdr
I:/1997/97362/As-Builts/dgn's/Vol_3/Sh 449-circularwall.dgn