STATE	PROJECT NO.	YEAR	SHEET NO.	TOTAL SHEETS
KANSAS	54-87 K-6657-01	2002	483	1122

Note: Proposed DI CL RJ Pipe ℄ Pipe Elev.=401.598
℄ 610 mm dia. PVC Elev. = 401.682
Proposed 375 x 490 mm Duct Bank
Center Elev.=401.766

Note: 610 mm PVC shall be 24" DSR35 as manufactured by Certainteed or approved equal.

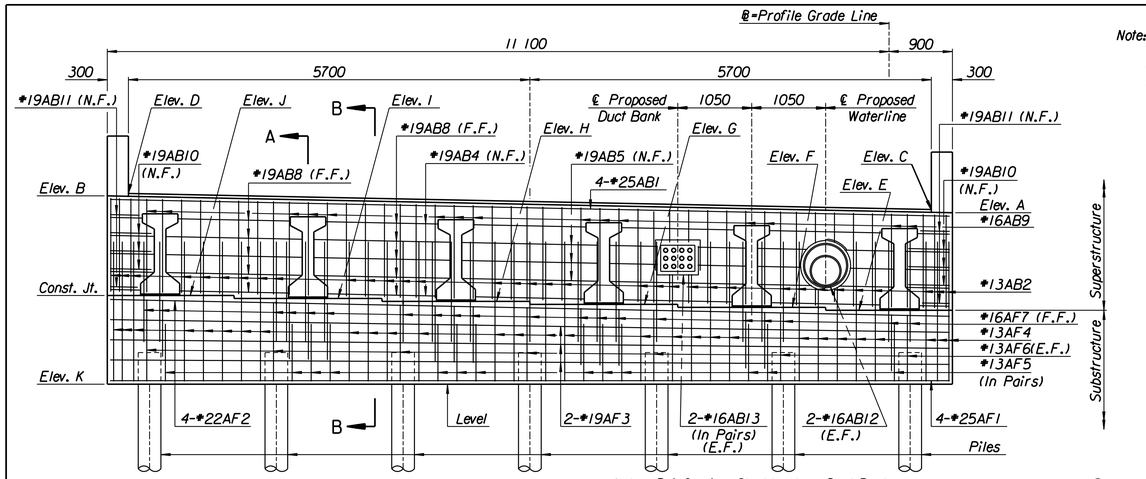

ELEVATION
(Looking Back Station)

Note : Reinforcing Steel to clear Duct Bank and Waterline by 40 mm (Typical).

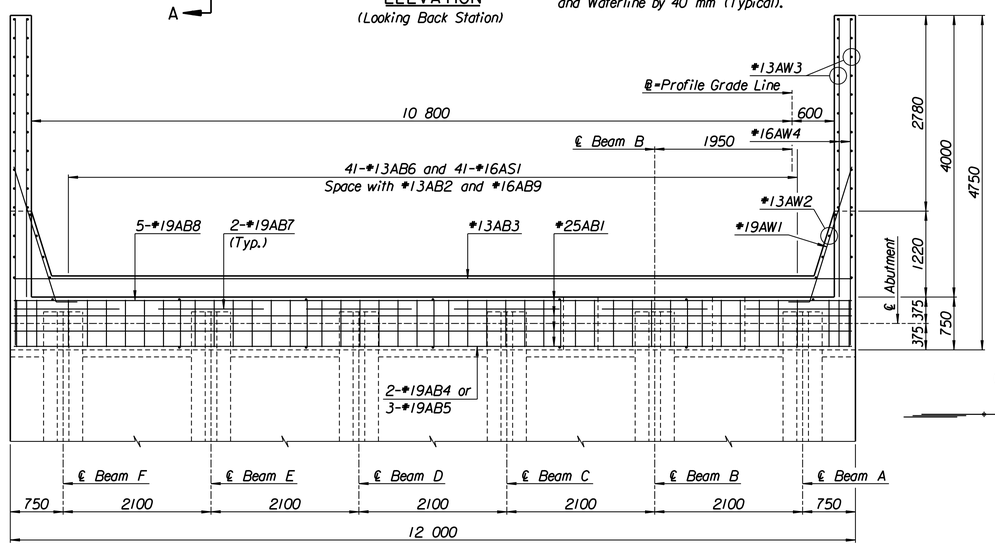

PLAN

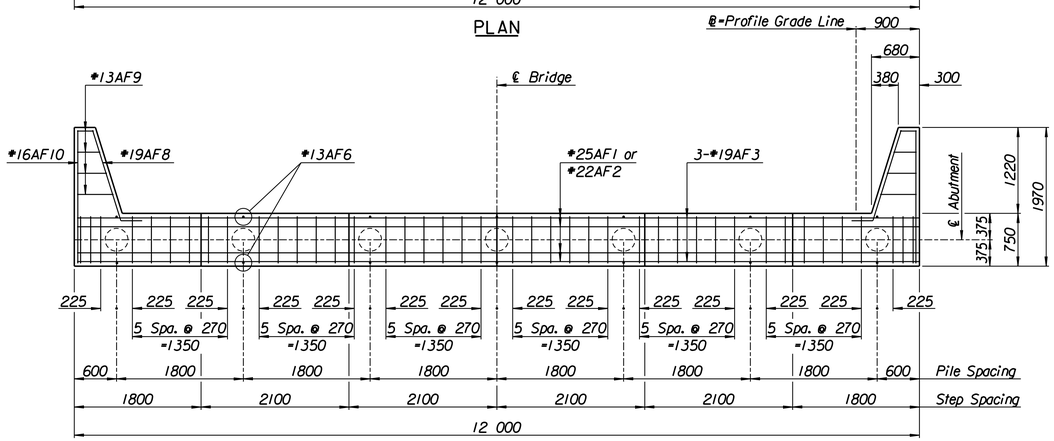

FOOTING PLAN

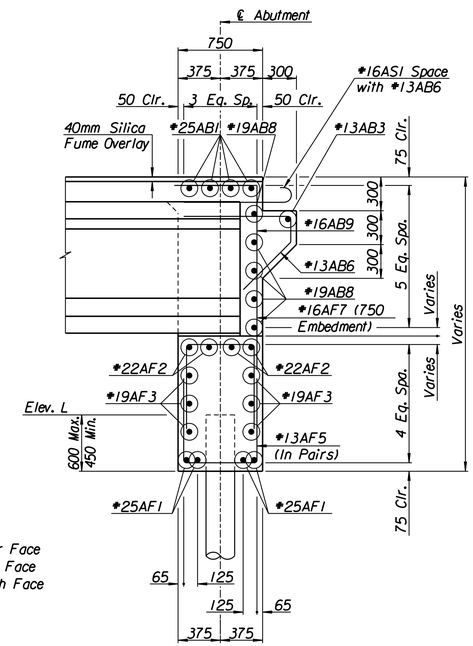

SECTION A-A
(See Framing Plan for Beam Embedment)

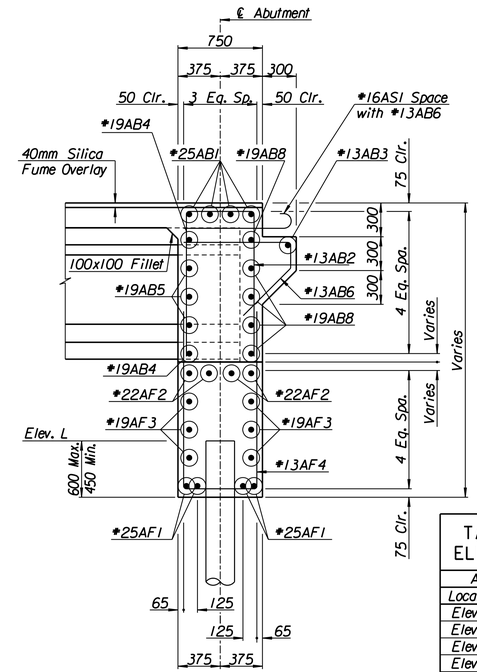

SECTION B-B

LEGEND:
N.F. = Near Face
F.F. = Far Face
E.F. = Each Face

TABLE OF ELEVATIONS	
Abutment #1	
Location	Elevation
Elev. A	402.423
Elev. B	402.663
Elev. C	402.469
Elev. D	402.697
Elev. E	401.038
Elev. F	401.080
Elev. G	401.122
Elev. H	401.164
Elev. I	401.206
Elev. J	401.248
Elev. K	399.988
Elev. L	400.588
Elev. M	402.675
Elev. N	402.449

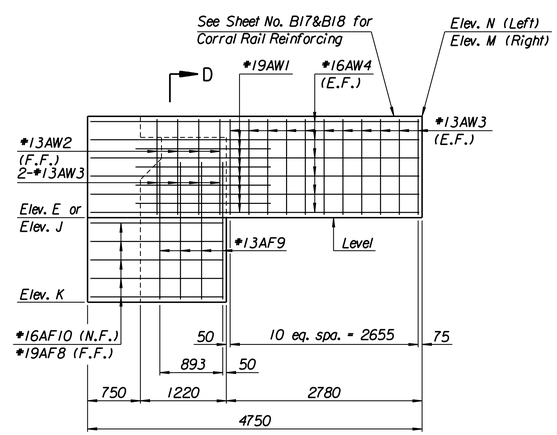

VIEW C-C

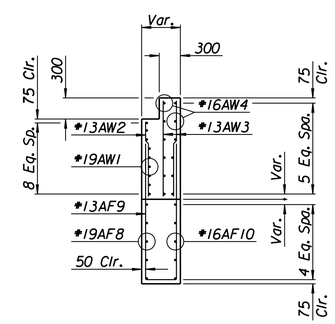

SECTION D-D

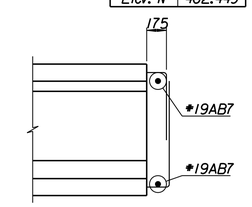

K3 BEAM END ELEVATION

Abutment Pile Loadings (kN)

	Actual	Allowable
Group I Loading	432	440

RECORD DRAWING

No.	Revisions	By	Date

CITY OF WICHITA
BR. NO. 54-87-19.32 (495) F.W.B. STA. 16+016.230
WEST KELLOGG WESTBOUND FRONTAGE ROAD
OVER COWSKIN CREEK
ABUTMENT NO. 1 DETAILS
SEDGWICK COUNTY

Professional Engineering Consultants, P.A.
303 S. TOPEKA • WICHITA, KANSAS 67202
316-262-2691 • FAX 316-262-3003

Designed by	M.D.G.	Checked by	R.A.S.	
Drawn by	W.L.L.	Date	April, 2002	Job No. 97362

Drawn By: wll
Plotted By: gdr Sept 07
I:/1997/97362/As-Builts/dgn's/Vol_3/Sh 483-abutmentwbfrt.dgn.dgn Last Rev: 8-31-07 By: gdr