STATE	PROJECT NO.	YEAR	SHEET NO.	TOTAL SHEETS
KANSAS	54-87 K-6657-01	2002	490	1122

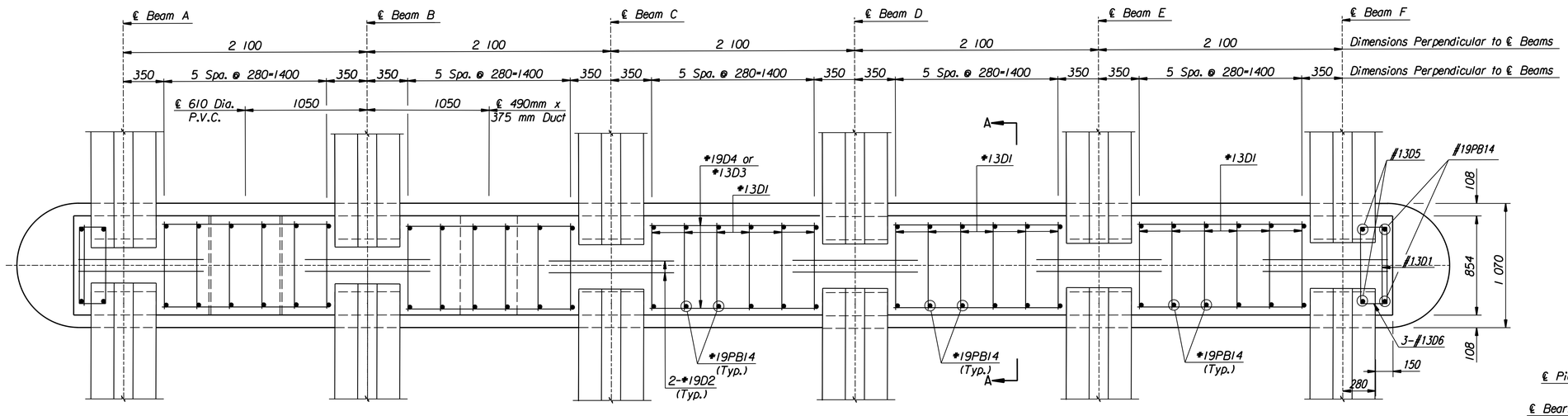

PLAN SECTION THRU PIER DIAPHRAGM

Note: Proposed DI CL RJ Pipe

℄ Pipe Elev. @	Pier No. 1	Pier No. 2	Pier No. 3	Pier No. 4
	401.713	401.688	401.522	401.337
℄ 610 mm dia. PVC Elev. @	Pier No. 1	Pier No. 2	Pier No. 3	Pier No. 4
	401.774	401.772	401.606	401.421

Proposed 490 x 375 mm Duct Bank

Center Elev. @	Pier No. 1	Pier No. 2	Pier No. 3	Pier No. 4
	401.858	401.856	401.690	401.505

Note: 610 mm PVC shall be 24" DSR35 as manufactured by Certainteed or approved equal.

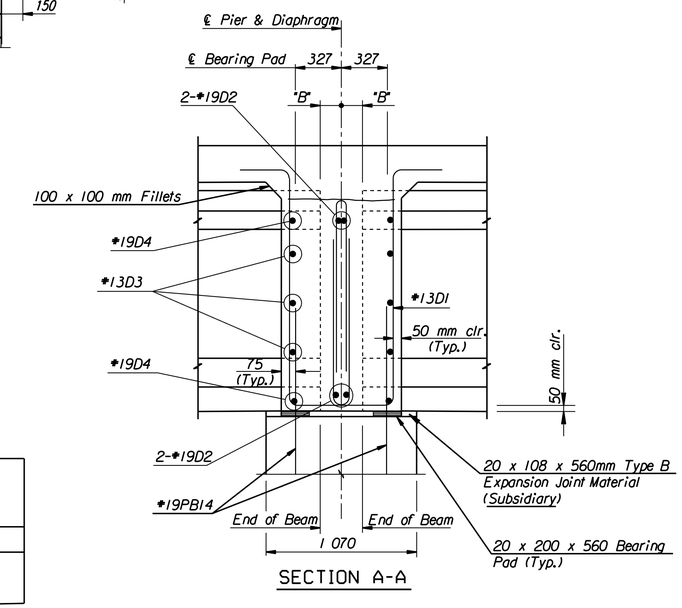

SECTION A-A

See Framing Plan for "B" dimensions

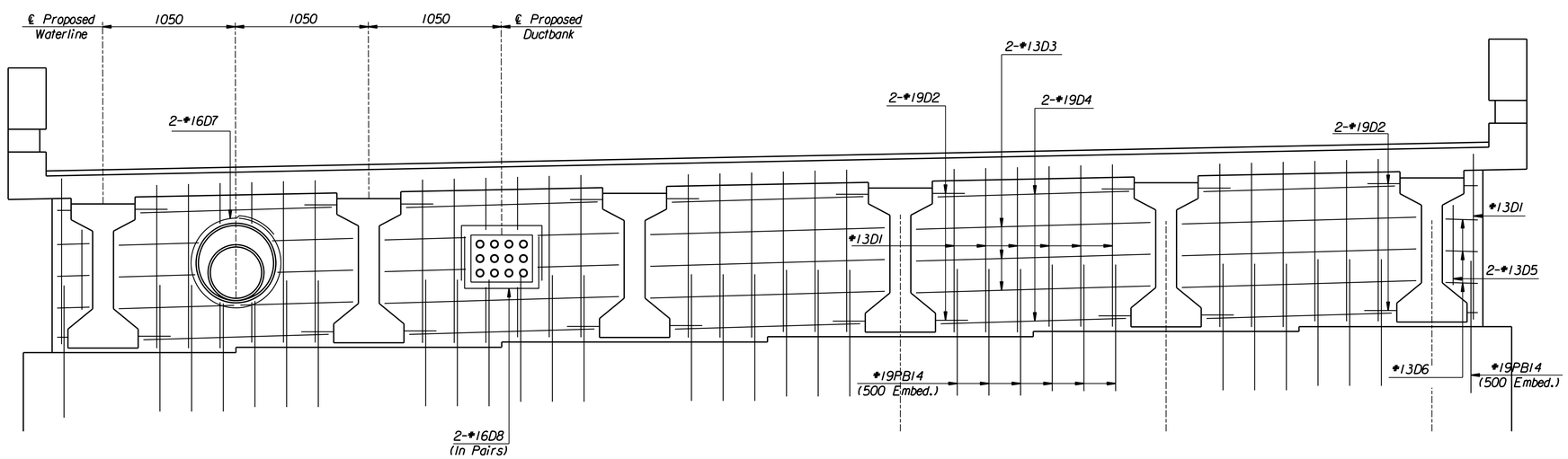

SECTION

Note: Reinforcing Steel to clear Ductbank and Waterline by 40 mm (Typical).

RECORD DRAWING

No.	Revisions	By	Date
1			

CITY OF WICHITA

BR. NO. 54-87-19.32(495) F.W.B. STA. 16+016.230

DIAPHRAGM DETAILS W.B. FRONTAGE ROAD OVER COWSKIN CREEK

SEDGWICK COUNTY

Professional Engineering Consultants, P.A.
303 S. TOPEKA • WICHITA, KANSAS 67202
316-262-2691 • FAX 316-262-3003

Designed by	RAS	Checked by	MDG
Drawn by	BJS	Date April, 2002	Job No. 97362

DSNR: RAS OPER: gdr SCALE: 1:20
I:/1997/97362/As-Builts/dgn's/Vol_3/Sh 490-diaphtwb.dgn Last Rev: 9-4-07 By: gdr