| STATE | PROJECT NO. | YEAR | SHEET NO. | TOTAL SHEETS |
|---|---|---|---|---|
| KANSAS | 54-87 K-6657-01 | 2002 | 770 | 1122 |

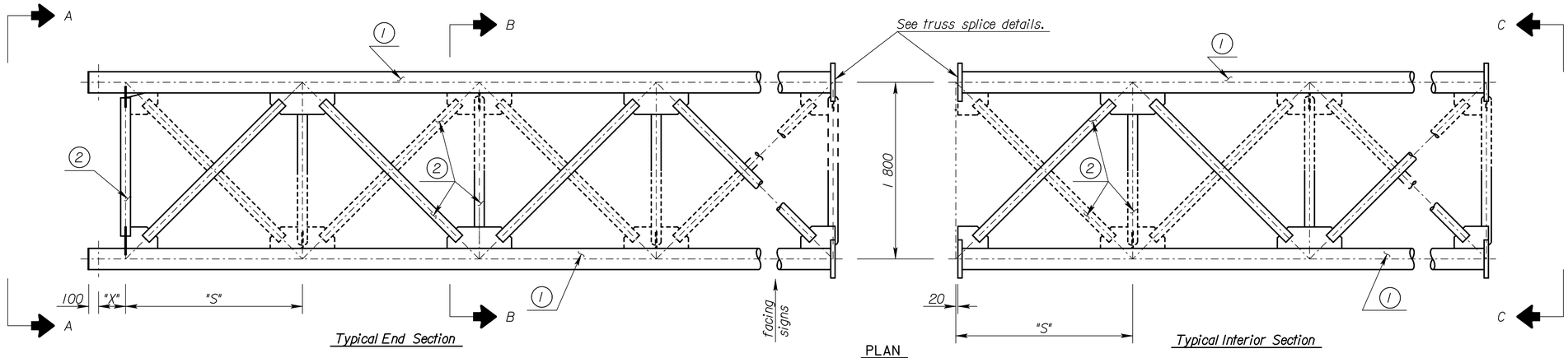


Typical End Section

PLAN

Typical Interior Section

Note: Dashed lines, in plan and elevation views, represent the bottom or rear portions of member (2).

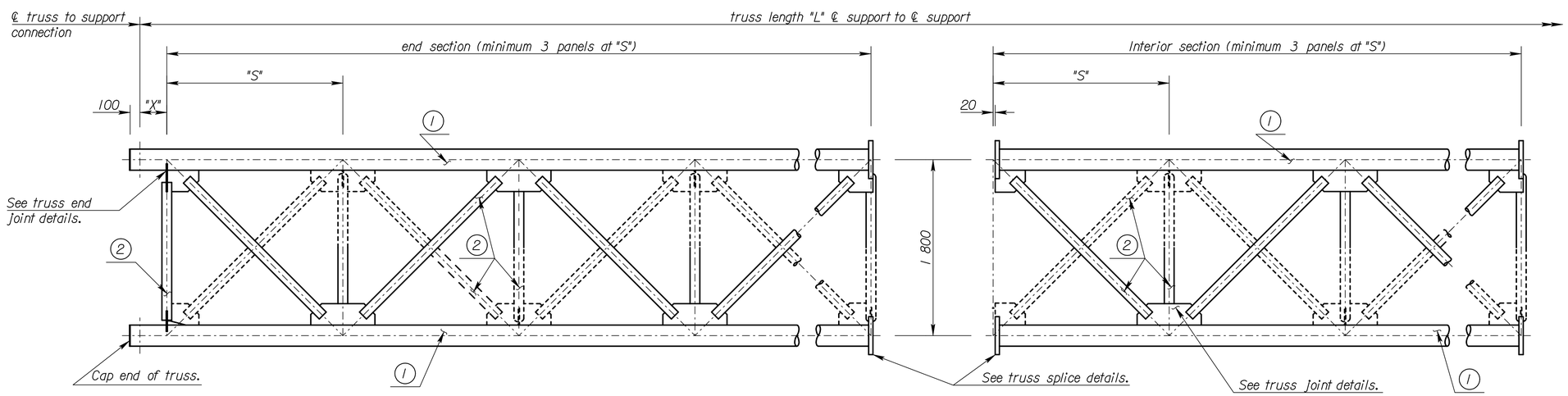


Typical End Section
(left end shown)

ELEVATION

Typical Interior Section

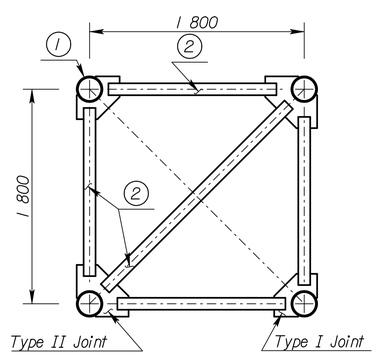


SECTION A-A
See truss end Joint details.

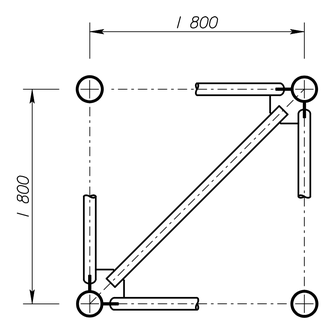


SECTION B-B
See truss Joint details.

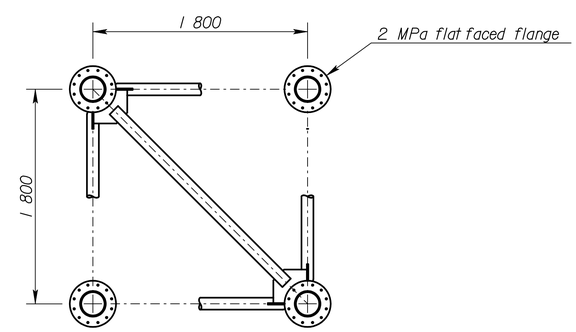


SECTION C-C
See truss splice details.

Note: See "Construction Layout" for wall thickness, "N","S","L" and "X" dimensions.

Member (1) is 219 mm O.D. pipe.

Member (2) is 102 mm O.D. pipe.

**RECORD DRAWING**

| NO. | DATE | REVISIONS | BY | APP'D |
|---|---|---|---|---|

KANSAS DEPARTMENT OF TRANSPORTATION

STANDARD STRUCTURAL SIGN SUPPORTS
SPAN TYPE OVERHEAD
ALUMINUM ALTERNATE
TRUSS FRAMING PLAN AND DETAILS

SL151B-03 SI — SEDGWICK CO.

| | | | | | | | |
|---|---|---|---|---|---|---|---|
| FHWA APPROVAL | | | 4-10-97 | APP'D | | Kenneth F. Hurst | |
| DESIGNED | RFM | DETAILED | DDP | QUANTITIES | | CADD | DJE |
| DESIGN CK. | RDH | DETAIL CK. | RDH | QUAN.CK. | | CADD CK. | LES |

Scale = 1:000
I:/1997/97362/As-Builts/dgn's/Vol 4/Sh 770-KDOT STD-Sign-151bsi.dgn Last Rev: 10-4-07 By: gdr