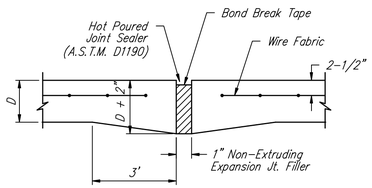

EXPANSION JOINT

NOTE: Extra Thickness to be Subsidiary to Price of Square Yards Pavement

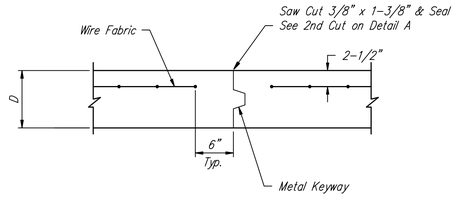

OPTIONAL CONTRACTION JOINT

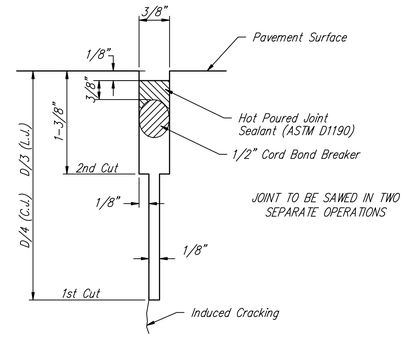

SAW JOINT DETAIL

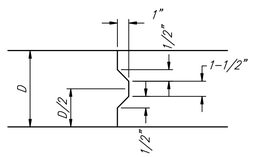

KEYWAY DETAIL

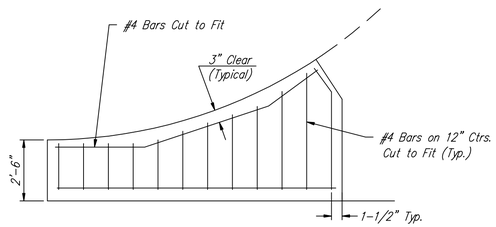

WING REINFORCING DETAIL

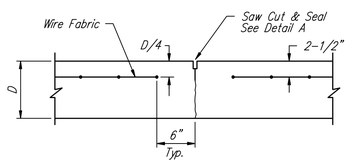

CONTRACTION JOINT DETAIL (C.J.)

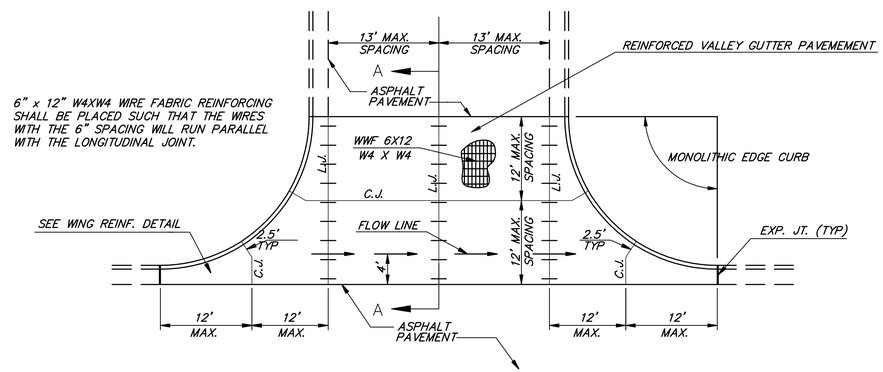

PLAN

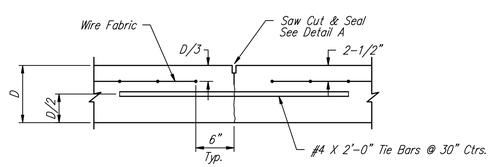

LONGITUDINAL JOINT DETAIL (L.J.)

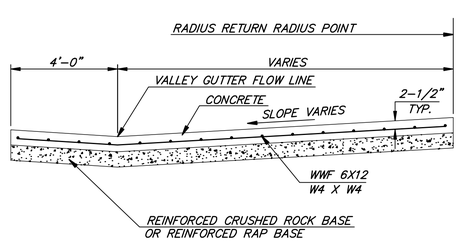

SECTION A-A

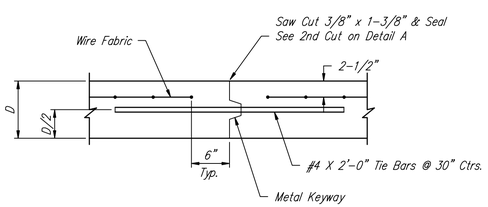

OPTIONAL LONGITUDINAL JOINT DETAIL (L.J.)

REINFORCED VALLEY GUTTER DETAIL

THE CITY OF WICHITA

CITY ENGINEER'S OFFICE
CITY HALL – SEVENTH FLOOR
455 NORTH MAIN STREET
WICHITA, KANSAS 67202
(316) 268-4501
(316) 268-4114 FAX

VALLEY GUTTER DETAILS

WHEELCHAIR RAMP DETAILS

PROJECT NUMBER	OCA #
87N-0245-01	706925
DATE MAR 96	SHEET 13 OF 55