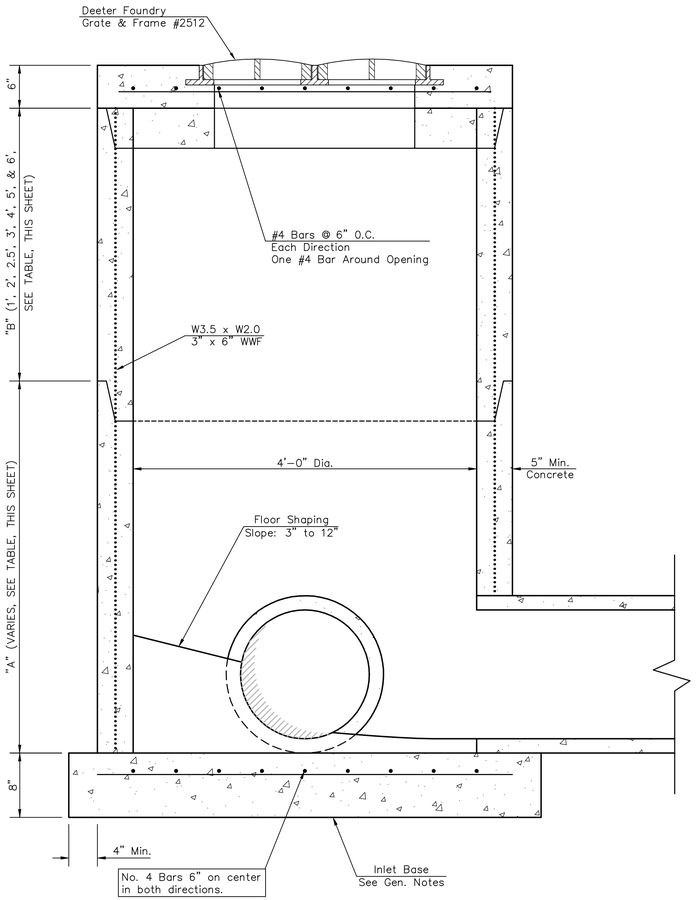

YARD INLET

LINE #	STA.	TOP OF INLET	INLET FLOW	"A"	"B"
1	2+98.3	203.00	200.06	2.64'	–

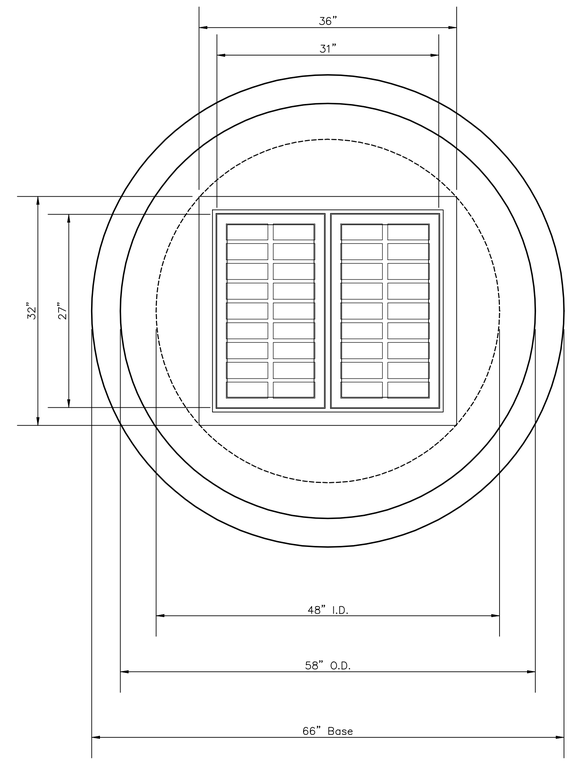

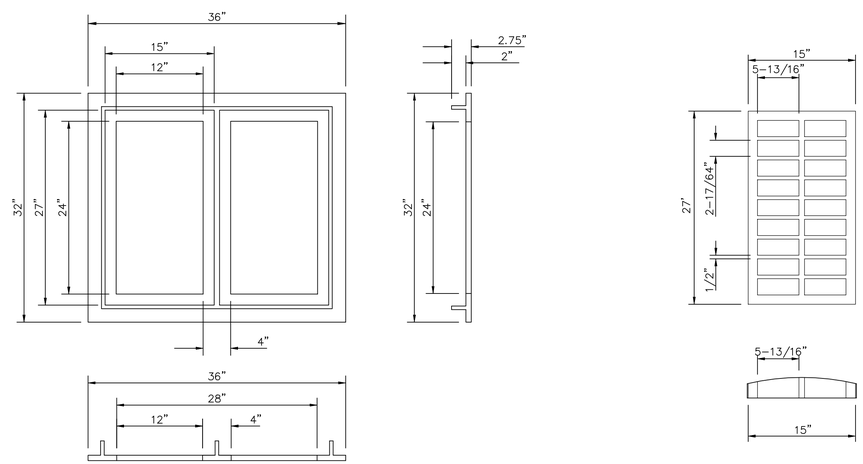

DEETER #2512 CATCH BASIN INLET GRATE & FRAME

GENERAL NOTES

1. Mortar used in masonry construction shall contain 8 sacks of cement per cubic yard. Concrete used in yard inlet bases shall conform to the requirements of concrete for concrete pavement construction as specified in the city standard paving specifications using city concrete cement mix without air entraining.

2. Reinforcing steel shall be installed in the yard inlet bases and shall consist of no. 4 bars placed on 6" centers in both directions. The yard inlet base reinforcement shall be placed 6" above the bottom of the yard inlet base. All costs for furnishing and installing reinforcing steel shall be included in the unit price bid for the yard inlet.

3. The floors of all yard inlet shall be shaped with flow channels such that the inlets will be self cleaning and free of areas where solids could be deposited. Flow channels shall be formed to match the bottom halves of the inflowing pipes and the outflowing pipe as shown by the drawings. Inlet floors shall have slopes of 3 inches per foot in the areas outside of the flow channels sloped toward the flow channels. Pipes laid through inlets shall have the top half removed to neat lines for the full inside diameter of the inlet. Inlet floors shall then be shaped around the bottom half of the pipe which forms the flow channel.

4. Pipes installed within the excavation made for the inlet shall be cradled with concrete to the limits of the inlet excavation. When clay pipe is used, the cradle shall extend to the first joint outside the inlet. The cradle shall be terminated at the clay pipe joint in a manner which will maintain the flexibility of the joint. Cost of cradle within inlet excavation or to clay pipe joints adjacent to inlet shall be included in the unit price bid for the inlet.

5. Inlet grate castings and inlet frame castings shall conform to the requirements as indicated in the standard specifications and as shown in the standard detail drawing.

6. The crowns of inflowing pipes shall never be set lower than the crown of the outflowing pipe.

7. Joints between inlet sections to be sealed with two two wraps of extruded butyl rubber joint mastic meeting City of Wichita Type "P" Manhole Specifications.

8. Special yard inlet shall be paid for at the unit price bid per each. All standard yard inlet diameters will be 4'.

Baughman

City of Wichita, Kansas
Special Yard Inlet

Baughman Company, P.A. 315 Ellis St. Wichita, KS 67211 P 316-262-7271 F 316-262-0149
ENGINEERING | SURVEYING | PLANNING | LANDSCAPE ARCHITECTURE

PROJECT NUMBER 472-84292
REVISIONS:

DESIGN C.O.W. | DRAWN Staff
APPROVED AEG | DATE 12-05-07
SCALE None
SHEET **26** OF **52**

E:\Auburn Hills 16th\PHASE 3\STR\Yardinlet.dwg 07-09-E928