FHWA REGION NO.	STATE	PROJECT NO.	YEAR	SHEET NO.	TOTAL SHEETS
7	KANSAS	PROJ NO 562-854112 (660502)	2004	5	7

Note to Designer: For dimensions in any direction larger than those listed on this sheet, a structural design of both the inlet and grate should be performed.

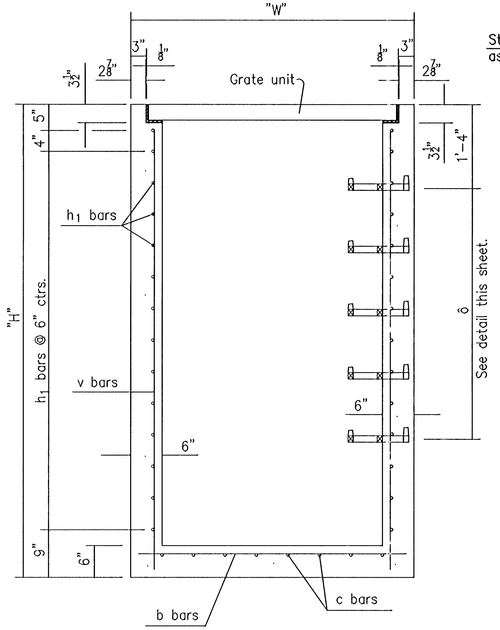

SECTION

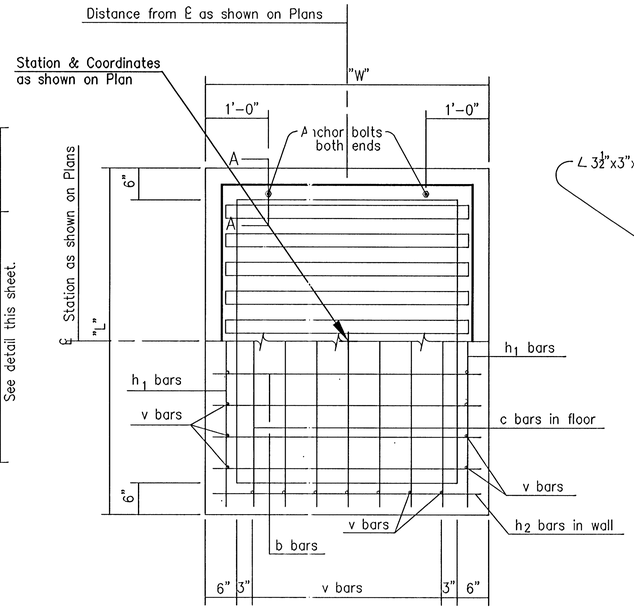

PLAN AND SECTION

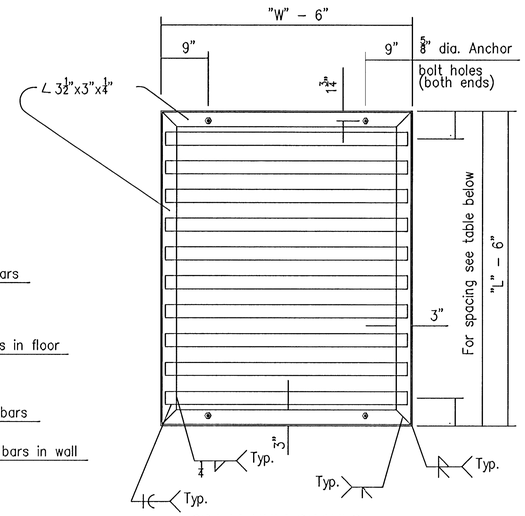

GRATE UNIT DETAILS

ô Steps shall be uniformly spaced. Spacing shall be 12" minimum and 16½" maximum.

GENERAL NOTE

Use Class A Concrete throughout. All exposed edges shall be finished with an edging tool.

At the contractors option, Class A Concrete (AE) or mix used in concrete pavement may be used throughout.

In general, pipes will enter and leave the manhole at various positions. Where possible bend bars around pipes.

Floor of inlet shall be shaped as shown in various "Examples" on Reinforced Concrete Manhole Standard Drawing RD633. Concrete used for shaping shall be unreinforced Class "A" Concrete or concrete pavement mix. No addition in concrete quantities shall be made for shaping floor of inlets.

Manhole steps, where used, shall be placed to afford easy access to top of shaped invert.

No deductions in concrete quantities shall be made for pipe openings.

All bars are #4 @ 6" spacing and shall have a minimum clearance of 1½" unless otherwise noted on the plans.

The top of the manhole shall be sloped slightly to approximately fit the ground line or other conditions as directed by the Engineer.

Steps shall be installed on all storm sewer inlets when specified in the plans or when "H" is equal to or greater than six feet. Steps shall comply with the KDOT Standard Specification.

The grate shall be fabricated from standard or commercial grade structural steel and black steel pipe. The unit shall be hot dipped, galvanized after fabrication, in accordance with ASTM A123 except the weight of coating shall average not less than 2.0 ounces per square foot of actual surface and no individual test shall show less than 1.8 ounces of coating per square foot of actual surface area.

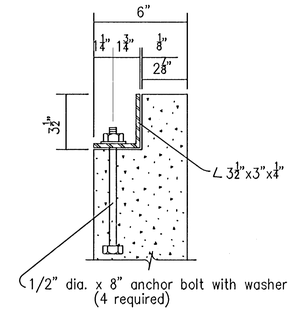

SECTION A-A

Note: Anchor bolts are subsidiary to the bid item "Inlet-Manhole, Special".

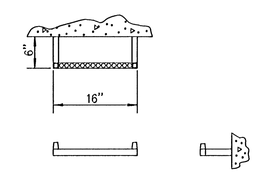

STEP DETAILS

BILL OF MATERIALS FOR INLET-MANHOLE (SPECIAL)

"L" "W" "H" 4'-6" x 4'-6" x 3'-6"				"L" "W" "H" 7'-6" x 4'-6" x 7'-6"																			
Bar	No.	Size	Length	Bar	No.	Size	Length	Bar	No.	Size	Length	Bar	No.	Size	Length	Bar	No.	Size	Length	Bar	No.	Size	Length
v	28	#4	3'-0"	v	40	#4	7'-0"	v		#4		v		#4		v		#4		v		#4	
c	7	#4	4'-3"	c	7	#4	7'-3"	c		#4		c		#4		c		#4		c		#4	
b	7	#4	4'-3"	b	13	#4	4'-3"	b		#4		b		#4		b		#4		b		#4	
h_1	12	#4	4'-3"	h_1	28	#4	7'-3"	h_1		#4		h_1		#4		h_1		#4		h_1		#4	
h_2	12	#4	4'-3"	h_2	28	#4	4'-3"	h_2		#4		h_2		#4		h_2		#4		h_2		#4	
Class "A" Conc. 1.23 Cu.Yd.				Class "A" Conc. 3.42 Cu.Yd.				Class "A" Conc. Cu.Yd.				Class "A" Conc. Cu.Yd.				Class "A" Conc. Cu.Yd.				Class "A" Conc. Cu.Yd.			
Reinf. steel 164 Lbs.				Reinf. steel 473 Lbs.				Reinf. steel Lbs.				Reinf. steel Lbs.				Reinf. steel Lbs.				Reinf. steel Lbs.			
Struct. steel 260 Lbs.				Struct. steel 430 Lbs.				Struct. steel Lbs.				Struct. steel Lbs.				Struct. steel Lbs.				Struct. steel Lbs.			
Class III Excav. 5 Cu.Yd.				Class III Excav. 17 Cu.Yd.				Class III Excav. Cu.Yd.				Class III Excav. Cu.Yd.				Class III Excav. Cu.Yd.				Class III Excav. Cu.Yd.			

BILL OF MATERIALS FOR INLET-MANHOLE (SPECIAL)

"L" "W" "H" 4'-6" x 4'-6" x 6'-0"				"L" "W" "H" 5'-6" x 4'-6" x 7'-6"				"L" "W" "H" 4'-0" x 4'-0" x 4'-6"				"L" "W" "H" 4'-6" x 4'-6" x 4'-0"				"L" "W" "H" 4'-6" x 4'-6" x 4'-6"				"L" "W" "H" 5'-6" x 4'-6" x 5'-0"			
Bar	No.	Size	Length	Bar	No.	Size	Length	Bar	No.	Size	Length	Bar	No.	Size	Length	Bar	No.	Size	Length	Bar	No.	Size	Length
v	28	#4	5'-6"	v	32	#4	7'-0"	v	24	#4	4'-0"	v	28	#4	3'-6"	v	28	#4	4'-0"	v	32	#4	4'-6"
c	7	#4	4'-3"	c	7	#4	5'-3"	c	6	#4	3'-9"	c	7	#4	4'-3"	c	7	#4	4'-3"	c	7	#4	5'-3"
b	7	#4	4'-3"	b	9	#4	4'-3"	b	6	#4	3'-9"	b	7	#4	4'-3"	b	7	#4	4'-3"	b	9	#4	4'-3"
h_1	22	#4	4'-3"	h_1	28	#4	5'-3"	h_1	16	#4	3'-9"	h_1	14	#4	4'-3"	h_1	16	#4	4'-3"	h_1	18	#4	5'-3"
h_2	22	#4	4'-3"	h_2	28	#4	4'-3"	h_2	16	#4	3'-9"	h_2	14	#4	4'-3"	h_2	16	#4	4'-3"	h_2	18	#4	4'-3"
Class "A" Conc. 1.95 Cu.Yd.				Class "A" Conc. 2.83 Cu.Yd.				Class "A" Conc. 1.30 Cu.Yd.				Class "A" Conc. 1.37 Cu.Yd.				Class "A" Conc. 1.52 Cu.Yd.				Class "A" Conc. 1.91 Cu.Yd.			
Reinf. steel 268 Lbs.				Reinf. steel 377 Lbs.				Reinf. steel 174 Lbs.				Reinf. steel 185 Lbs.				Reinf. steel 205 Lbs.				Reinf. steel 261 Lbs.			
Struct. steel 260 Lbs.				Struct. steel 315 Lbs.				Struct. steel 206 Lbs.				Struct. steel 260 Lbs.				Struct. steel 260 Lbs.				Struct. steel 315 Lbs.			
Class III Excav. 9 Cu.Yd.				Class III Excav. 14 Cu.Yd.				Class III Excav. 6 Cu.Yd.				Class III Excav. 6 Cu.Yd.				Class III Excav. 7 Cu.Yd.				Class III Excav. 9 Cu.Yd.			

PIPE DIMENSIONS AND SPACING

L x W	No. of Bars	Dia. x Length x Spacing	
7'-6"x4'-6"	13	2½ø/x 3'-10¾" pipes @ 6" ctrs.	6"
5'-6"x4'-6"	10	2½ø/x 3'-10¾" pipes @ 5½" ctrs.	5½"
4'-6"x4'-6"	8	2½ø/x 3'-10¾" pipes @ 5½" ctrs.	4½"
4'-0"x4'-0"	7	2½ø/x 3'-4½" pipes @ 5½" ctrs.	4½"

NO.	DATE	REVISIONS	BY	APP'D
8	12-5-00	Added Note to Designer	R.J.S.	J.O.B.
7	12-16-97	Revised step spacing	R.J.S.	J.O.B.
6	1-30-92	Rev. step det.&notes,ent. on CADD	R.J.S.	J.O.B.

KANSAS DEPARTMENT OF TRANSPORTATION

INLET - MANHOLE, SPECIAL

RD648

FHWA APPROVAL	12-21-00	APP'D James O. Brewer			
DESIGNED	DETAILED	QUANTITIES	TRACED	B.N.B.	
DESIGN CK.	DETAIL CK.	QUAN.CK.	TRACE CK.	R.J.S.	