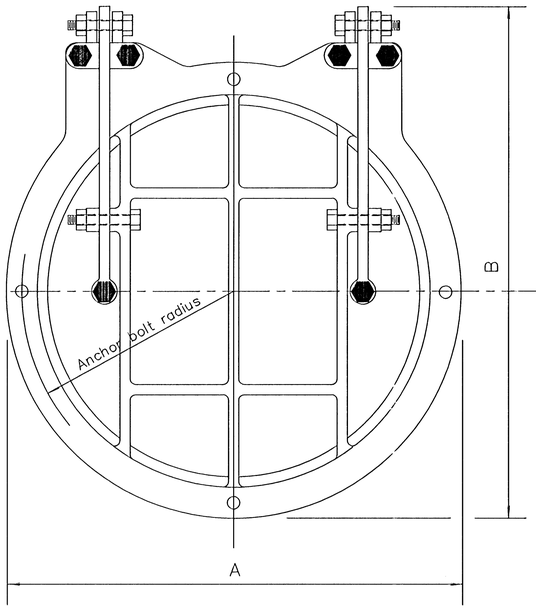


ELEVATION

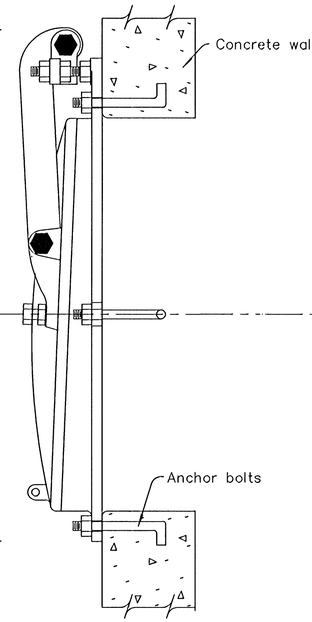


SIDE VIEW & SECTION
THRU CONCRETE WALL
FLAT BACK

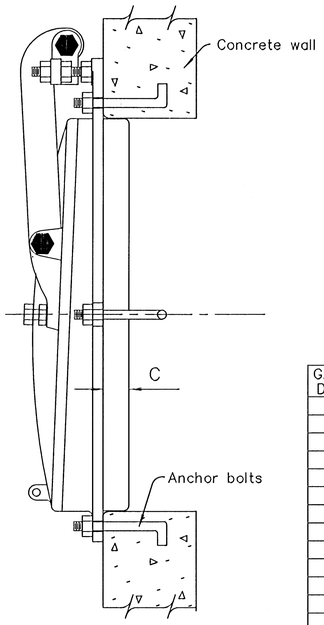


SIDE VIEW & SECTION
THRU CONCRETE WALL
SPIGOT BACK

| GATE SIZE DIAMETER | A | B | C |
|---|---|---|---|
| 8" | 13 ½" | 14 ½" | 1 ¼" |
| 10" | 16" | 16 ¾" | 1 ¼" |
| 12" | 19" | 19 ¾" | 1 ¼" |
| 15" | 22 ¼" | 23 ⅝" | 1 ¼" |
| 18" | 24 ¾" | 28 ⅛" | 1 ¼" |
| 21" | 28" | 30 ½" | 1 ¼" |
| 24" | 32" | 35 ⅛" | 1 ¼" |
| 30" | 37" | 42" | 2" |
| 36" | 44" | 49 ½" | 2" |
| 42" | 50 ¾" | 57 ⅞" | 2 ½" |
| 48" | 57" | 66 ¼" | 2 ½" |
| 54" | 64 ¼" | 71 ⅞" | 2 ½" |
| 60" | 69" | 80 ½" | 2 ½" |
| 66" | 80" | 90" | 2 ½" |
| 72" | 82" | 95 ⅛" | 3" |
| 84" | 100" | 112 ⅛" | 3" |
| 96" | 113 ¼" | 125 ⅜" | 3" |
| | | | |

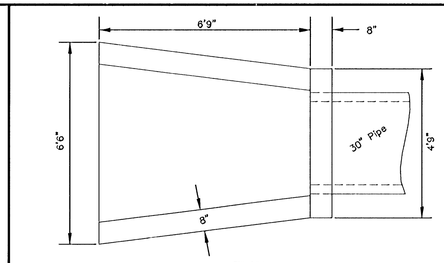


PLAN

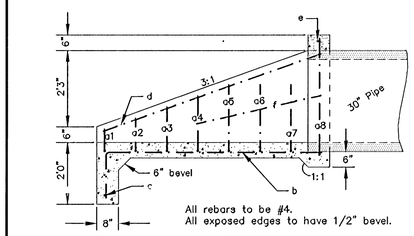


SECTION

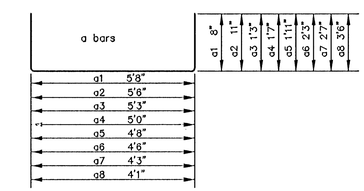


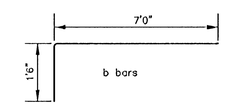


| TABLE OF QUANTITIES | | | | |
|---|---|---|---|---|
| BAR | NUMBER | LENGTH | SHAPE | WEIGHT |
| a1 | 1 | 7'0" | | 4.68 |
| a2 | 1 | 7'4" | | 4.90 |
| a3 | 1 | 7'9" | | 5.18 |
| a4 | 1 | 8'2" | | 5.46 |
| a5 | 1 | 8'6" | | 5.68 |
| a6 | 1 | 9'0" | | 6.01 |
| a7 | 1 | 9'5" | | 6.29 |
| a8 | 1 | 11'1" | | 7.40 |
| b | 7 | 8'6" | | 35.07 |
| c | 1 | 6'0" | | 4.01 |
| d | 2 | 7'6" | | 10.02 |
| e | 1 | 4'5" | | 2.95 |
| f | 2 | 4'3" | | 5.68 |
| Total Rebar, lbs | | | | 103.33 |
| Concrete, C.Y. | | | | 2.01 |

All rebars to be #4.

HEADWALL FOR 30" PIPE

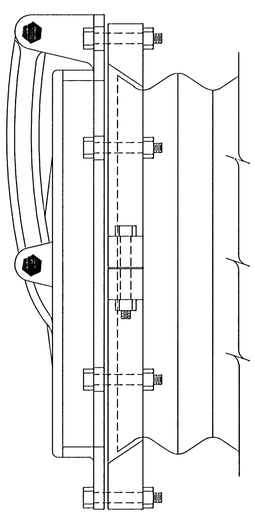

ALTERNATE CONNECTION BAND

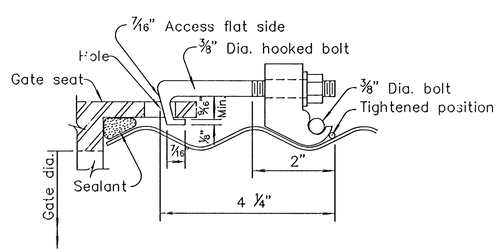


ALTERNATE CONNECTION TO
CORRUGATED STEEL PIPE

Gate sizes from 12" to 24" dia., use 4 hooked bolts.
Gate sizes from 30" to 36" dia., use 6 hooked bolts.
Gate sizes from 42" to 48" dia., use 8 hooked bolts.

GENERAL NOTES

Automatic flap gates shall conform to the dimensions and approximate weights shown in the tables. The gate shall be installed in accordance with the manufacturers' recommendations.

When no water is against the face of the gate, the flap shall seat on the finished frame. Seating surfaces of both frame and flap shall be cast iron and machined to a close fit.

The gate flap, frame and links shall be cast iron. Anchor bolts, assembly bolts and nuts shall be galvanized steel.

The gate is designed to withstand a maximum operating head of twenty (20) feet on the check side, measured from the center line of the gate to the high water level.

The illustrations, notes and table of dimensions shown are recommended for gates designed for 20 feet of operating head. Other approved makes may be substituted with the approval of the Engineer.

| NO. | DATE | REVISIONS | BY | APP'D |
|---|---|---|---|---|
| 7 | 12-27-93 | Delete paint note | R.J.S. | J.O.B. |
| 6 | 4-9-92 | Alt. conn. band, ent. on CADD | R.J.S. | J.O.B. |
| 5 | 7-5-90 | Revised paint note | R.J.S. | J.O.B. |

KANSAS DEPARTMENT OF TRANSPORTATION

AUTOMATIC FLAP GATE

RD515

| | | | |
|---|---|---|---|
| FHWA APPROVAL | 2-15-94 | APP'D. James O. Brewer | |
| DESIGNED | DETAILED | QUANTITIES | TRACED Bowser |
| DESIGN CK. | DETAIL CK. | QUAN.CK. | TRACE CK. Seitz |

DRAINAGE HOT SPOT

**HEADWALL DETAIL FOR 30" PIPE**

N. WOOD LANE, WICHITA, KANSAS

CED PROJ. NO.: 20041209


**CERTIFIED ENGINEERING DESIGN, P.A.**

810 WEST DOUGLAS, SUITE C
WICHITA, KANSAS 67203
PH.(316)262-8808 FAX.(316)262-1669


| | | |
|---|---|---|
| DESIGNED: HDF | SCALE: NTS | SHEET 6 |
| DRAWN: COW,KDOT | DATE: 12/04 | |
| CHECKED: HDF | CED FILE:06-HDWL30-FLPGTE | TOTAL 7 |