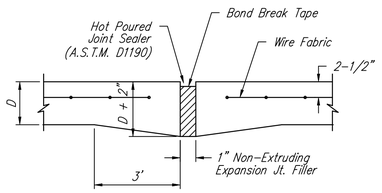

EXPANSION JOINT

NOTE: Extra Thickness to be Subsidiary to Price of Square Yards Pavement

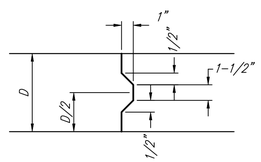

KEYWAY DETAIL

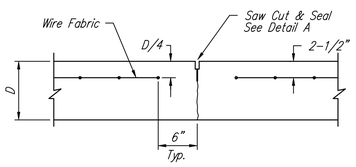

CONTRACTION JOINT DETAIL (C.J.)

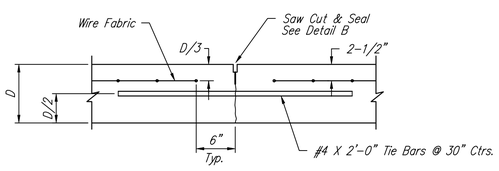

LONGITUDINAL JOINT DETAIL (L.J.)

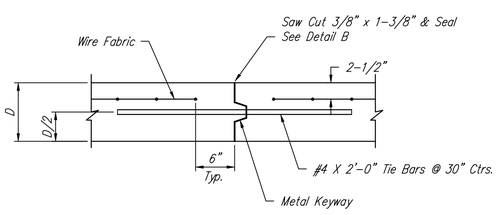

OPTIONAL LONGITUDINAL JOINT DETAIL (L.J.)
(CONSTRUCTION JOINT)

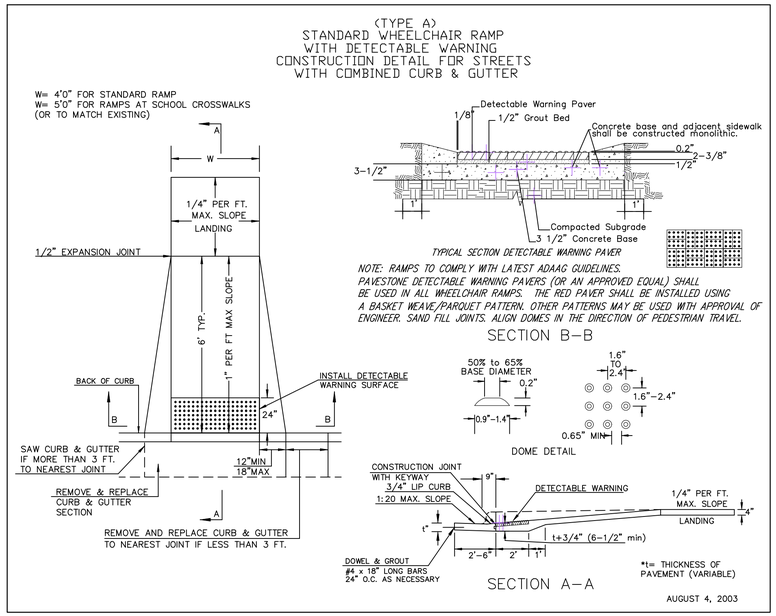

WHEELCHAIR RAMP DETAIL

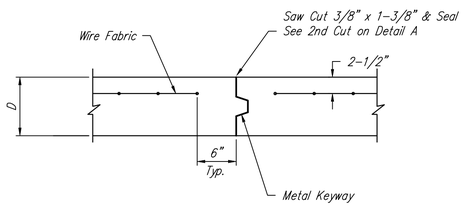

OPTIONAL CONTRACTION JOINT
(CONSTRUCTION JOINT)

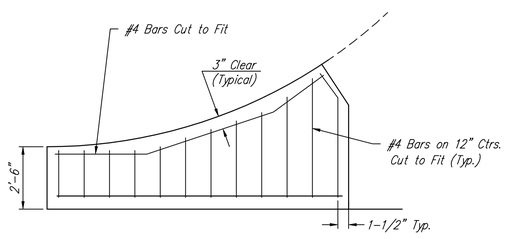

WING REINFORCING DETAIL

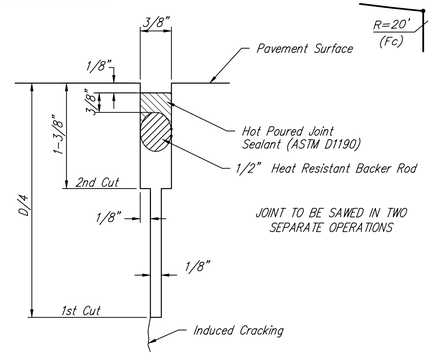

SAW JOINT DETAIL "A"

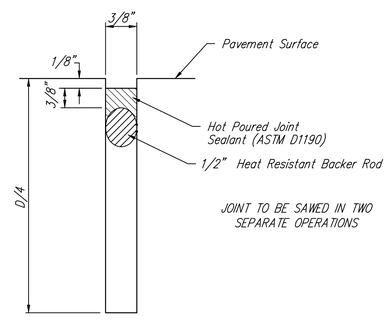

SAW JOINT DETAIL "B"

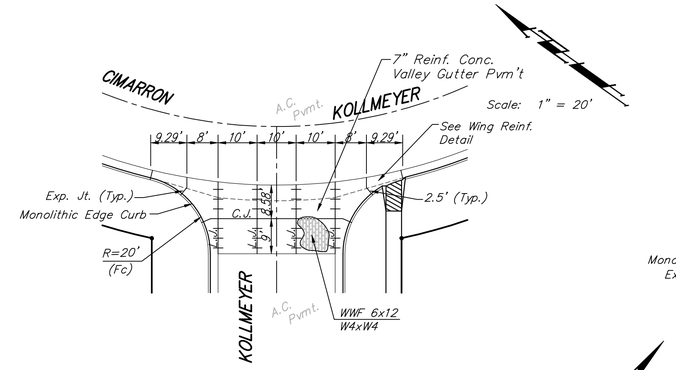

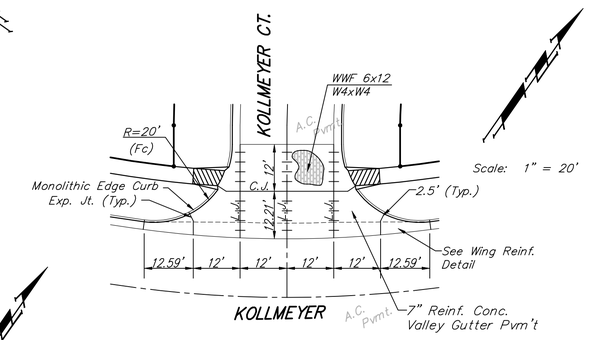

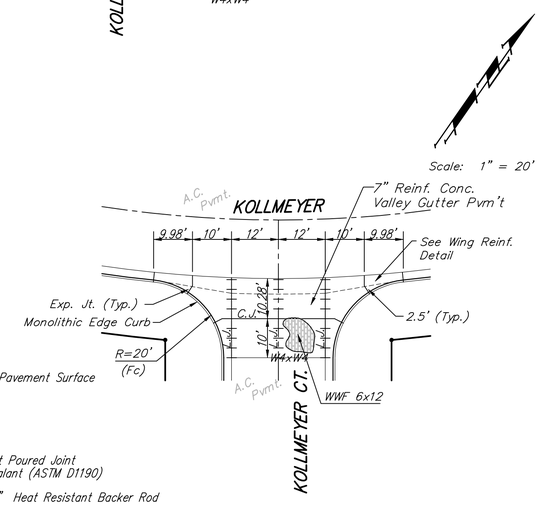

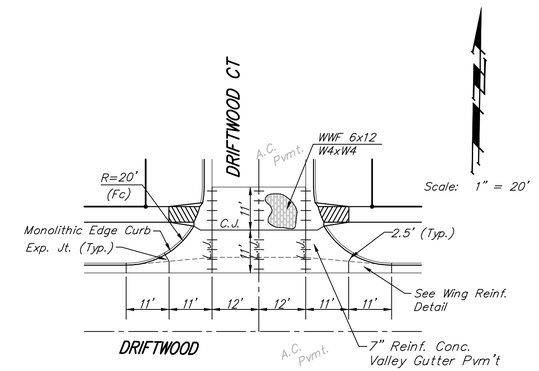

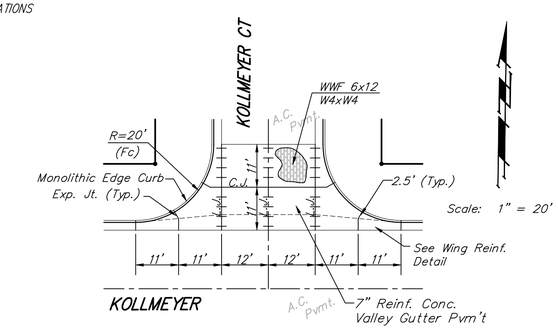

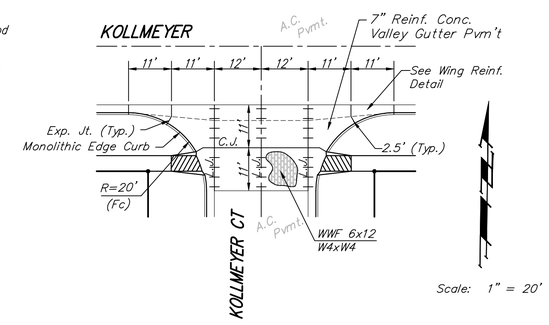

NOTE: 6" X 12" W4XW4 Wire Fabric Reinforcing Shall Be Placed So That The Wires With The 6" Spacing Will Run Parallel With The Longitudinal Joints.

Baughman

VALLEY GUTTER DETAILS

Baughman Company, P.A. 315 Ellis St. Wichita, KS 67211 P 316-262-7271 F 316-262-0149
ENGINEERING | SURVEYING | PLANNING | LANDSCAPE ARCHITECTURE

PROJECT NUMBER 472-84582	DESIGN STAFF / DRAWN STAFF
REVISIONS:	APPROVED / DATE 01/08
	SCALE NONE
	SHEET 5 OF 72

EdgeWater\Phase1\Vgdetail 07-05-E838