STANDARD WHEELCHAIR RAMP CONSTRUCTION DETAIL FOR STREETS WITH COMBINED CURB & GUTTER (TYPE A)

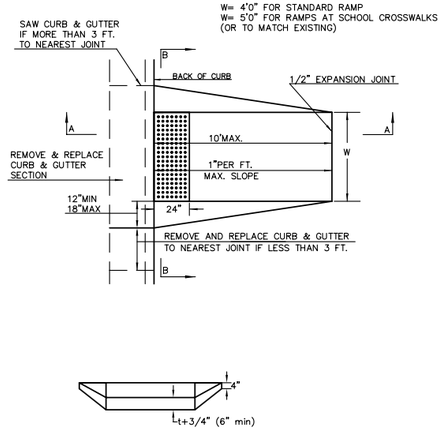

SECTION B–B

STANDARD WHEELCHAIR RAMP CONSTRUCTION DETAIL FOR CONCRETE STREETS WITH MONOLITHIC CURB (TYPE A)

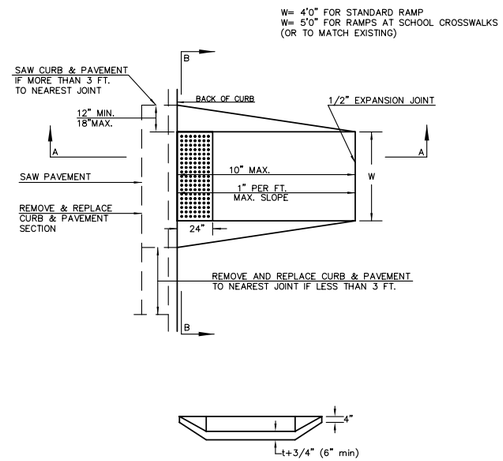

SECTION B–B

STANDARD WHEELCHAIR RAMP CONSTRUCTION DETAIL FOR STREETS WITH COMBINED CURB & GUTTER AND FULL WALK (TYPE B)

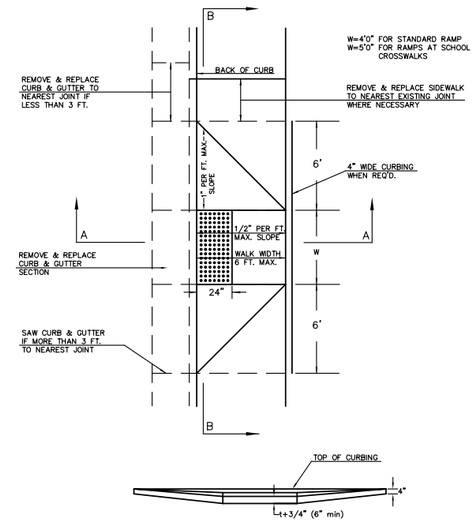

SECTION B–B

STANDARD WHEELCHAIR RAMP CONSTRUCTION DETAIL FOR STREETS WITH MONOLITHIC CURB AND FULL WALK (TYPE B)

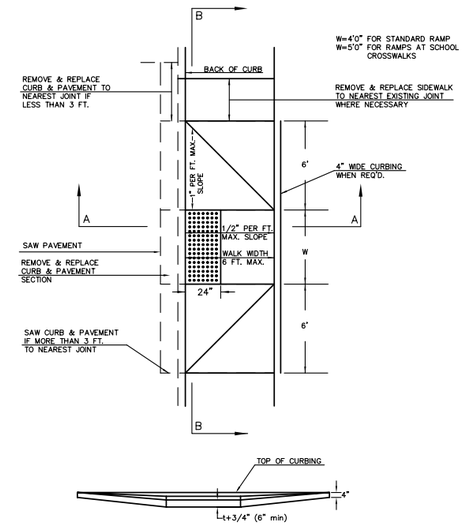

SECTION B–B

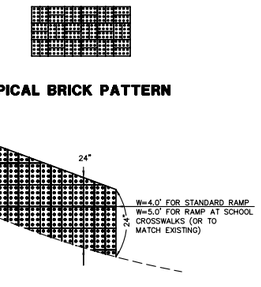

TYPICAL BRICK PATTERN

BRICK PATTERN WHEN RAMP INTERSECTS A RADIUS

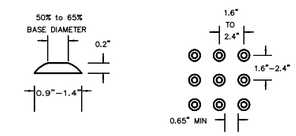

DOME DETAIL

STANDARD WHEELCHAIR RAMP CONSTRUCTION DEAIL FOR STREET WITH COMBINED CURB AND GUTTER ON RADIUS WITH 6'± FROM BACK OF CURB TO PROPERTY CORNER (TYPE C)

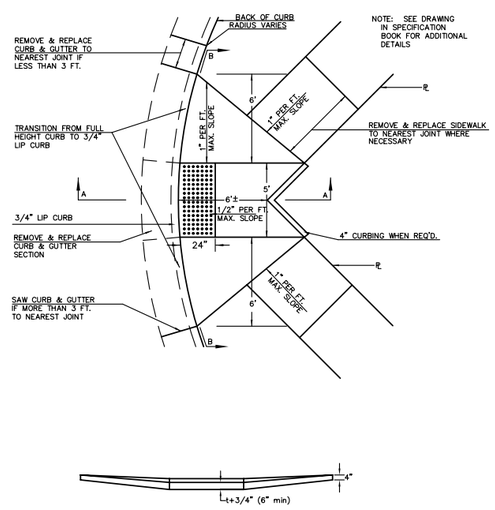

SECTION B–B

STANDARD WHEELCHAIR RAMP CONSTRUCTION DETAIL FOR STREET WITH MONOLITHIC CURB ON RADIUS WITH 6'± FROM BACK OF CURB TO PROPERTY CORNER (TYPE C)

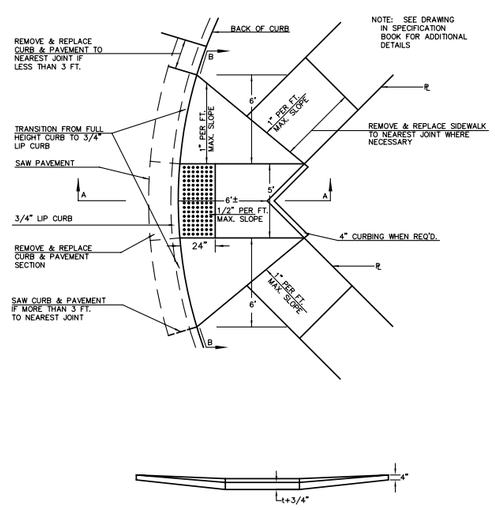

SECTION B–B

STANDARD WHEELCHAIR RAMP CONSTRUCTION DETAIL FOR STREETS WITH COMBINED CURB & GUTTER WITH ONE FULL SIDEWALK (TYPE D)

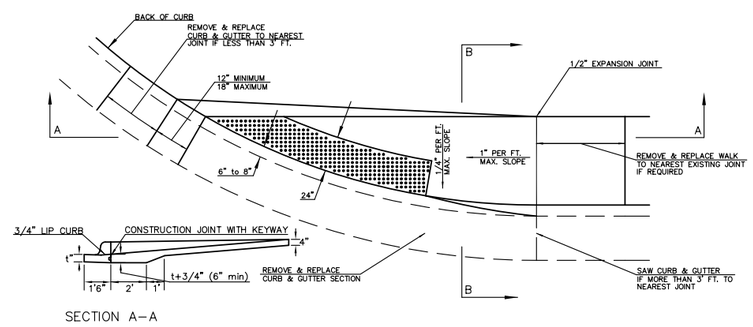

SECTION A–A

STANDARD WHEELCHAIR RAMP CONSTRUCTION DETAIL FOR STREETS WITH MONOLITHIC CURB WITH ONE FULL SIDEWALK (TYPE D)

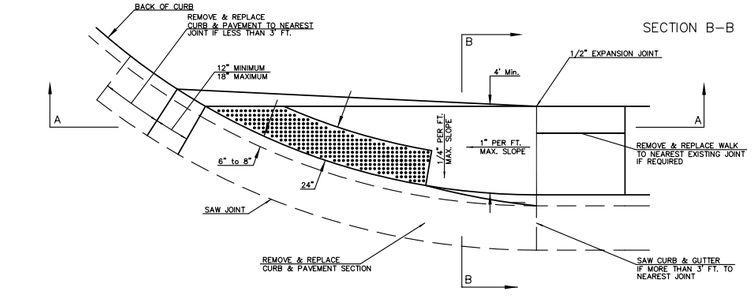

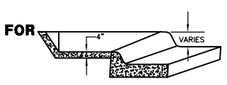

SECTION B–B

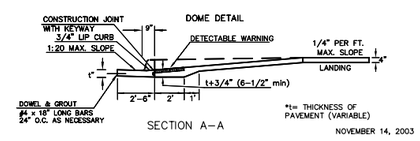

SECTION A–A

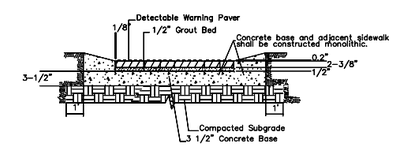

SECTION B–B

TYPICAL SECTION DETECTABLE WARNING PAVER

NOTE: RAMPS TO COMPLY WITH LATEST ADAAG GUIDELINES. PAVESTONE DETECTABLE WARNING PAVERS (OR AN APPROVED EQUAL) SHALL BE USED IN ALL WHEELCHAIR RAMPS. THE RED PAVER SHALL BE INSTALLED USING A BASKET WEAVE/PARQUET PATTERN. OTHER PATTERNS MAY BE USED WITH APPROVAL OF ENGINEER. SAND FILL JOINTS. ALIGN DOMES IN THE DIRECTION OF PEDESTRIAN TRAVEL.

MKEC REV. 5–18–04
REV. 11–03–03

CITY OF WICHITA
PUBLIC WORKS
ENGINEERING

WHEELCHAIR RAMP DETAILS

CITY ENGINEER
JAMES L. ARMOUR, P.E.

PROJECT NUMBER	OCA NUMBER	DATE
472–83708 472–84047	XXXXXX	06/04

CITY ENGINEER'S OFFICE
CITY HALL – SEVENTH FLOOR
455 NORTH MAIN STREET
WICHITA, KANSAS 67202–1620
(316) 268–4501
(316) 268–4114 FAX

DESIGN	DRAWN
ABC	DEF

SHEET
5 of 29

J:\Civil\04429\dwg\Pav\PHASE 1\04429ED4.DWG