STATE	PROJECT NO.	YEAR	SHEET NO.	SHEETS
KANSAS	87 N–0190–01	2005	22	96

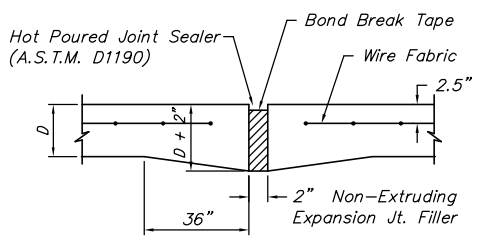

EXPANSION JOINT

NOTE: Extra Thickness to be Subsidiary to Price of Square Yards Pavement

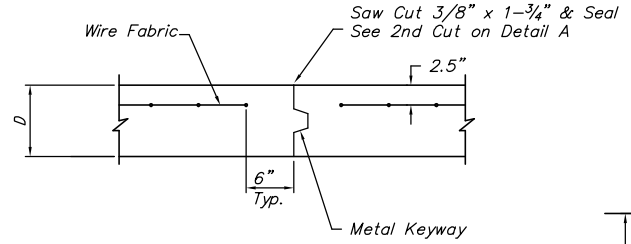

OPTIONAL CONTRACTION JOINT

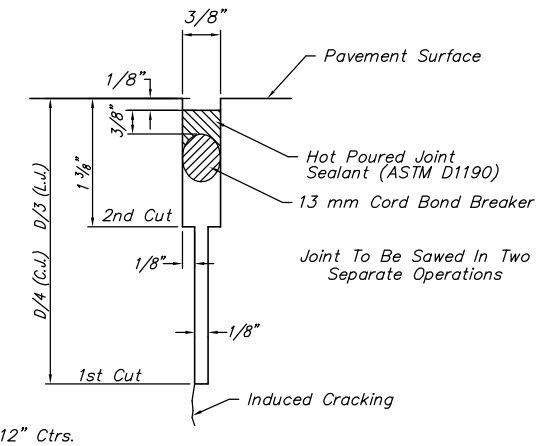

SAW JOINT DETAIL

D = 7"

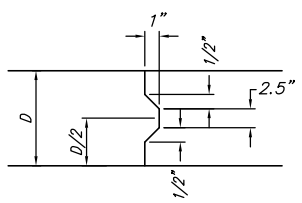

KEYWAY DETAIL

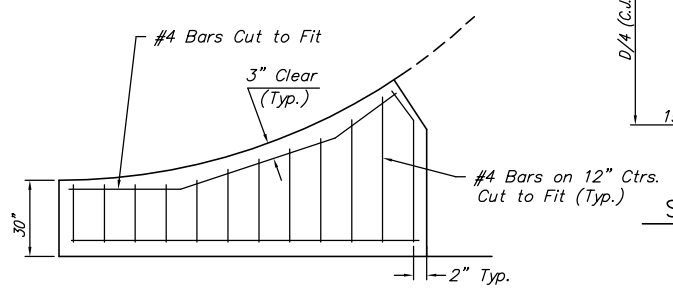

WING REINFORCING DETAIL

NOTES:

Curb cut ramps are to be located as shown on the plans or as directed by the Engineer.

The normal gutter line profile shall be maintained through the area of the ramp.

If possible, drainage structures should not be placed in line with ramps. Except where existing drainage structures are being utilized in the new construction, location of the ramp should take precedence over location of drainage structure.

Sidewalks shall be ramped where the driveway curb is extended across the walk.

Care shall be taken to assure a uniform grade on the ramp, free of sags and short grade changes.

Expansion joints shall be placed in sidewalks as follows: In long runs, expansion joints shall be 3/4" redwood boards flush with the surface, at a maximum spacing of 125'. This same joint should be used at sidewalk junctions as shown in Typical Plan.

Where the end of the sidewalk abuts a curb, a 3/4" redwood board flush with the surface shall be used.

Where the sidewalk is parallel and adjacent to a rigid structure, a 1/2" premoulded joint filler (Non–extruding, Type B) shall be used.

Sidewalk shall slope toward the street at a maximum of 1:50, and where necessary, may be de–pressed or sloped to fit alleys and entrances as shown on the plans or as directed by the Engineer.

Where clear width of sidewalk between top of ramp and building or other obstruction is less than 48 inches, the slope of the flared sides shall not exceed 1:12.

Where sidewalk is shown to be constructed back of an entrance it shall be 6" thick with welded wire mesh reinforcement of the same gauge and spacing of wires as in entrance pavement, as shown in the Reinforcement Diagram. Bid item will be "Sidewalk Construction (6") either with or without air entrainment.

Where the plans do not require air entrainment for sidewalk and sidewalk ramps, at the Contractor's option, Class A Concrete (AE) may be used throughout. Payment will be made as square yards of Sidewalk Construction.

At the Contractor's option Class A Concrete (AE) may be used throughout for construction of steps, but payment will be made as Class A Concrete.

Surface texture of the ramp shall be that obtained by a coarse brooming or steel tining transverse to the slope of the ramp and shall be sufficient to provide a ramp surface which contrasts with adjacent surfaces.

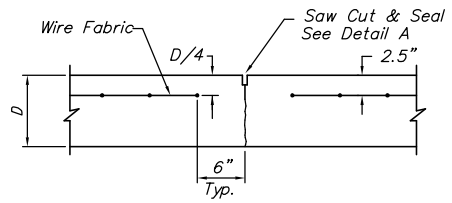

CONTRACTION JOINT DETAIL (C.J.)

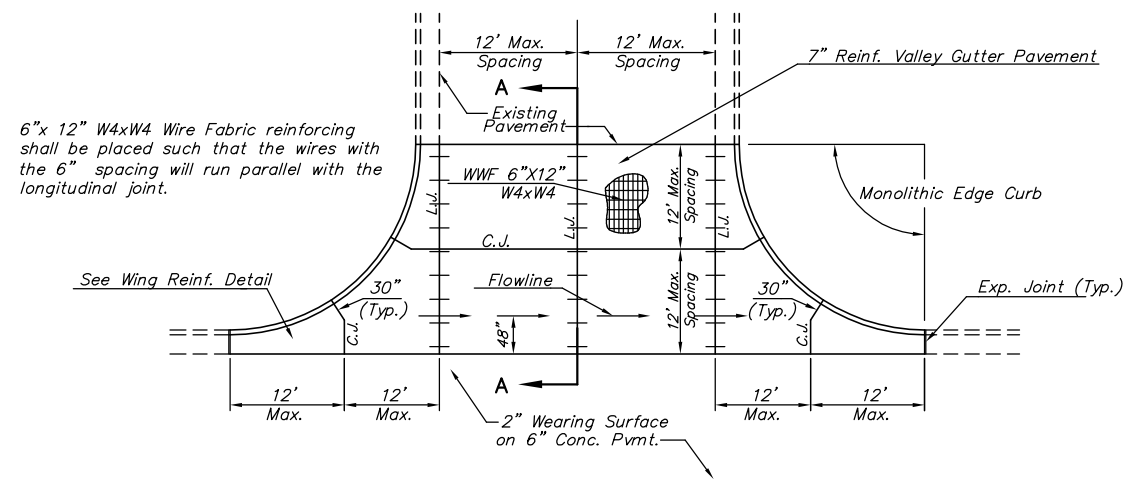

PLAN

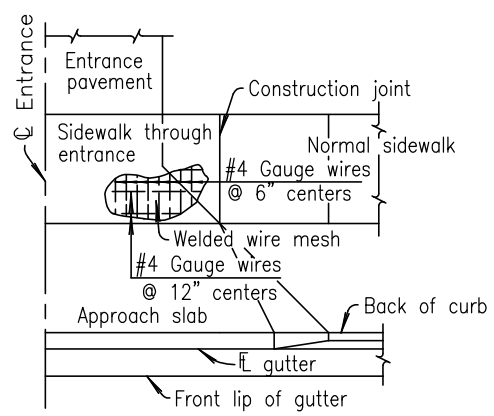

REINFORCEMENT DIAGRAM
SIDEWALK THROUGH ENTRANCE

→ Variable width (5'–0" min.). Entrance walk to be same width as approach walk. Sidewalk width of 4'–0" may be used where existing conditions prohibit use of 5'–0".

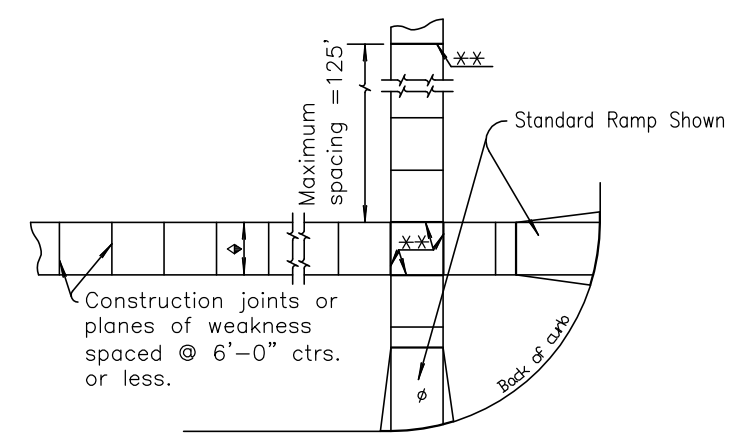

TYPICAL PLAN

** Expansion joint (3/4" redwood board) located as shown.

SIDEWALK DETAILS

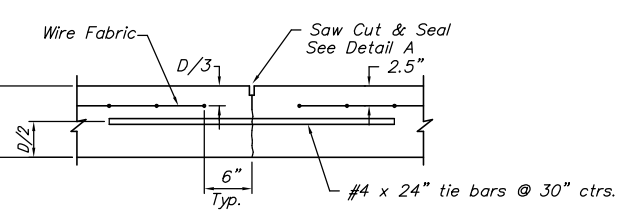

LONGITUDINAL JOINT DETAIL (L.J.)

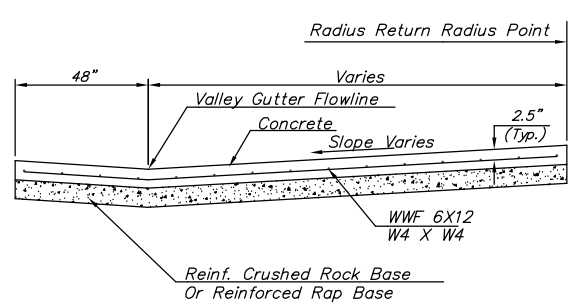

SECTION A–A

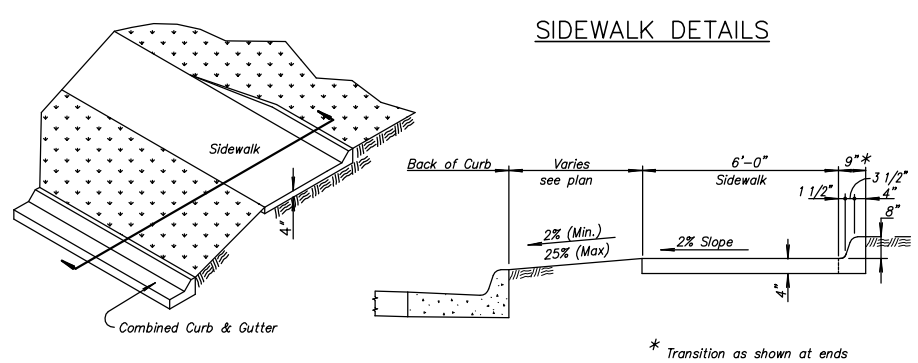

PLAN SECTION

SIDEWALK (SPECIAL)

Note: Sidewalk (Special) shall be constructed at locations shown on plans.

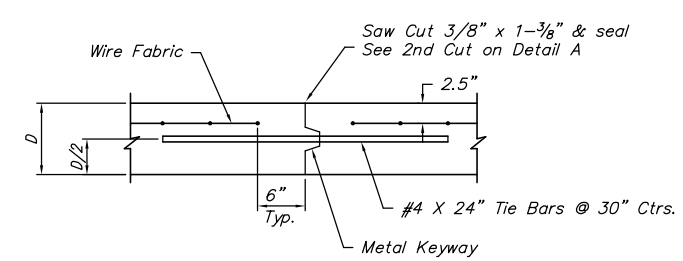

OPTIONAL LONGITUDINAL JOINT DETAIL (L.J.)

REINFORCED VALLEY GUTTER DETAIL

J:\Civil\04178\dwg\DETAILS\04178ed3.dwg 5/17/2005 9:41:12 AM CST

KANSAS DEPARTMENT OF TRANSPORTATION

VALLEY GUTTER & SIDEWALK DETAILS

PROJECT NO. 87 N–0190–01 SEDGWICK CO.

M K E C ENGINEERING CONSULTANTS, INC.
WICHITA, KANSAS

DESIGNED BY: JRA		CHECKED BY: JRA	
DRAWN BY: WNJ		DATE: JULY 2004	SHEET 22 OF 96