STATE	PROJECT NO.	YEAR	SHEET NO.	TOTAL SHEETS
KANSAS	87 N-0190-01	2005	37	96

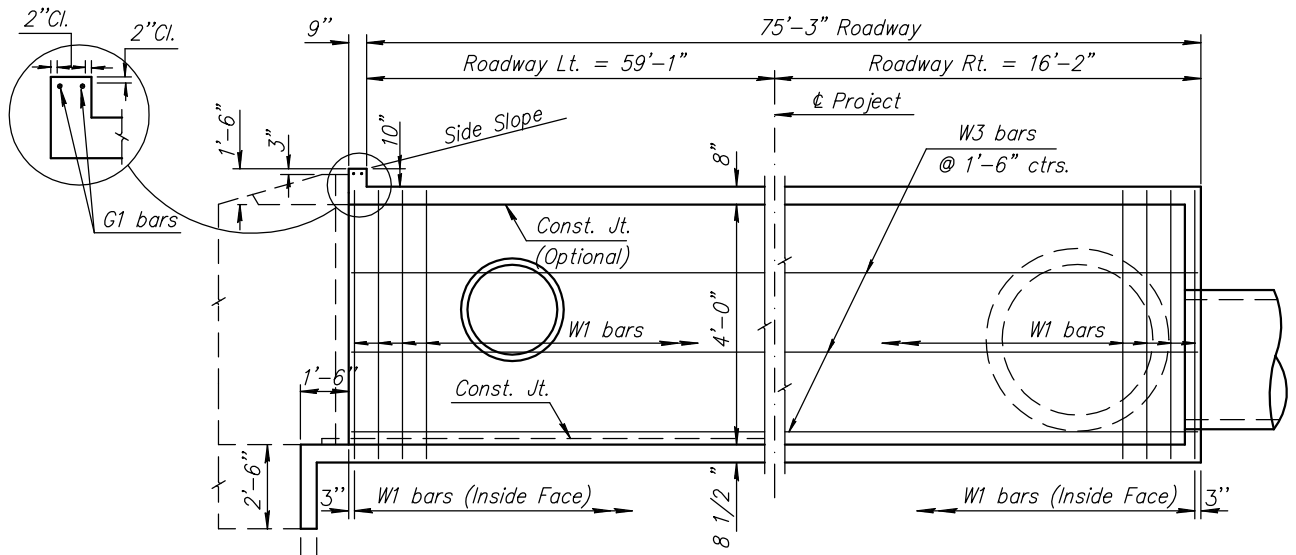

SECTION AND ELEVATION

(Normal to ℄ Roadway)

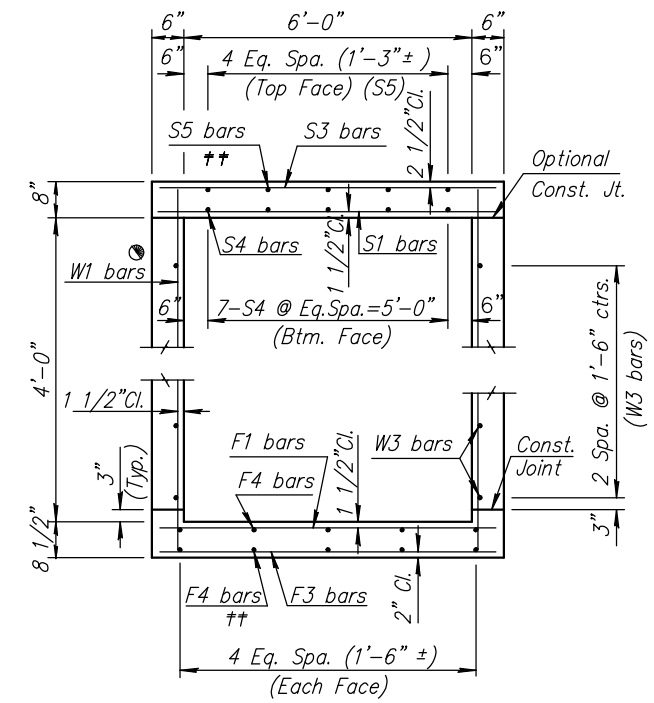

TYPICAL SECTION

◒ See RCB Auxillary Details for Optional Splice.

Note: S3 bars omitted unless grade box or slab thickness is greater than or equal to 12".

F3 bars omitted unless floor thickness is greater than or equal to 12".

±± Omit S5 bars when S3 bars are omitted and omit the bottom layer of F4 bars when F3 bars are omitted.

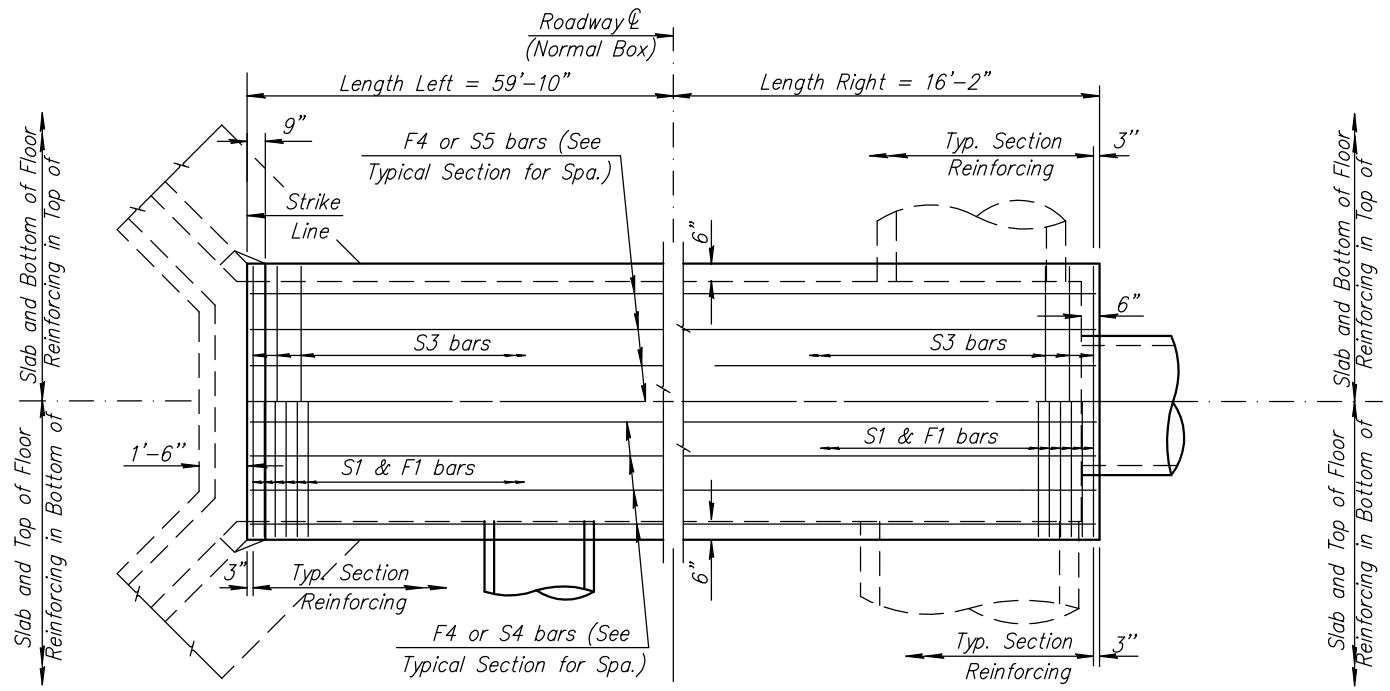

NORMAL BOX, LT.

(Downstream)

PLUGGED BOX END, RT.

(Upstream)

PLAN

Note:
The pre-cast manufacturer shall provide sufficient reinforcing steel around holes formed in the pre-cast RCB. Shop drawings of the RCB which show the holes and any additional reinforcing steel shall be approved by a licensed professional engineer in the state of Kansas.

GENERAL NOTES

LOADING: HS20-44 AASHTO Specifications, 1983 Edition.
UNIT STRESSES: Grade 4.0 Concrete; f'c = 4,000 p.s.i.
Reinforcing Steel; fy = 60,000 p.s.i.
FILL HEIGHT: Unless otherwise noted, the Design Fill Height is measured from the riding surface at the culvert and shall include the surfacing.
CONCRETE: Grade 4.0 Concrete shall be used throughout. Bevel all exposed edges with a 3/4 inch triangular moulding. Where Grade 4.0 Concrete (AE) is specified, it shall be placed in the top slab above the Construction Joint.
REINFORCING: All reinforcing shall conform to ASTM A615, Grade 60. All dimensions relative to reinforcing steel shall be to centerline of bar unless otherwise noted.
EXCAVATION: Excavation for culverts less than bridge length shall not be paid for directly but shall be subsidiary to Grade 4.0 Concrete. Excavation for RCB Bridges shall be paid for as Class ||| Excavation.
SEAL COURSE: A Seal Course may be required by the Engineer. The Seal Course shall be unreinforced Concrete (Commercial Grade) to a minimum depth of 3 inches or as determined by the Engineer. Concrete for the seal course shall be paid for at the unit price set for Concrete for Seal Course.
FOUNDATION STABILIZATION: Foundation Stabilization may be required as directed by the Engineer. The depth of Foundation Stabilization shall be determined by the Engineer. Foundation Stabilization shall be paid for at the determined Unit Price set for Foundation Stabilization. See Auxiliary Details.
QUANTITIES: The quantities shown in the Culvert Summary include apron and/or soil saver quantities when their construction is required by the plans. Payment for additional quantities that result from including seal course and/or floating apron, as a change in original plans, shall be made at the Unit Price bid for the various items involved.
GRANULAR BACKFILL (WINGWALLS): Special backfill procedures may be required at the direction of the Engineer. See Auxiliary Details Sheet.
STRIKE LINE: Wingwalls and that portion of the RCB outside the Strike Line shall be constructed level. Footing for wingwalls shall be constructed with the culvert floor. See wingwall detail sheet.

Minimum Splice Lengths	
#4	1'-4"
#5	1'-8"
#6	2'-0"

CULVERT SUMMARY

Flow Line Elev. Lt.	Flow Line Elev. Rt.	Crown Gr. Elev.	Design Fill Ht.	Skew	Left Wings	Right Wings	Scour Apron	Soil Saver	Concrete Barrel (Cu. Yds.)	Concrete Wings (Cu. Yds.)	Concrete Total (Cu. Yds.)	Reinf. Steel (Gr. 60) Barrel (Lbs.)	Reinf. Steel (Gr. 60) Wings (Lbs.)	Reinf. Steel (Gr. 60) Total (Lbs.)
190.22	191.69	197.88	2	0	FLARED	NONE	YES	NO	38.66	6.40	45.06	4454	386	4840

BAR SCHEDULE

F1 Size	F1 Spa.	F1 No.	F1 Length	F3 Size	F3 Spa.	F3 No.	F3 Length	F4 Size	F4 Spa.	F4 No.	F4 Length	S1 Size	S1 Spa.	S1 No.	S1 Length	S3 Size	S3 Spa.	S3 No.	S3 Length	S4 Size	S4 No.	S4 Length	S5 Size	S5 No.	S5 Length
6	7"	130	6'-8"	N/A	N/A	N/A	N/A	N/A	N/A	N/A	N/A	4	10	38'-6"	6	7"	130	6'-8"	N/A	N/A	N/A	N/A	N/A	N/A	N/A	5	14	38'-8"	N/A	N/A	N/A

K1 Size	K1 Spa.	K1 No.	K1 Length	K2 Size	K2 Spa.	K2 No.	K2 Length	W1 Size	W1 Spa.	W1 No.	W1 Length	W3 Size	W3 Spa.	W3 No.	W3 Length	W3 Size	W3 No.	W3 Length	G1 Size	G1 No.	G1 Length	G2 Size	G2 No.	G2 Length	Size	Spa.	No.	Length
N/A	N/A	N/A		N/A	N/A	N/A		4	9"	204	5'-1"	N/A	N/A	N/A	N/A	4	12	38'-6"	N/A	N/A	N/A	N/A	5	4	6'-8"	N/A	N/A	N/A

SUMMARY OF QUANTITIES

Concrete (Grade 4.0)	45.1 C.Y.
Concrete (Grade 4.0)(AE)	0.0 C.Y.
Reinforcing Steel (Gr. 60)	4840 Lbs.
Reinforcing Steel (Epoxy Coated)	0 Lbs.
Class ||| Excavation	C.Y.
Foundation Stabilization (Set)	1 C.Y.
Concrete for Seal Course (Set)	1 C.Y.
Granular Backfill (Wingwalls) (Set)	1 C.Y.

J:\Civil\04178\dwg\RCB\04178RC1.dwg 03/24/2005 09:41:01 AM CST

NO.	DATE	REVISIONS	BY	APP'D

KANSAS DEPARTMENT OF TRANSPORTATION

Sta. 43+75

SINGLE 6 ft x 4 ft RCB

PROJ. NO. 87 N-0190-01 Sedgwick Co.

FHWA APPROVAL 6-5-91 APP'D KENNETH F. HURST

DESIGNED | DETAILED | QUANTITIES | TRACED
DESIGN CK. | DETAIL CK. | QUAN.CK. | TRACE CK.

37