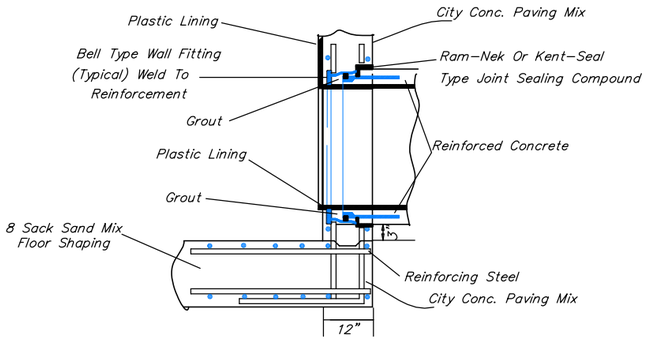

R.C.P. CONNECTION DETAIL
SANITARY SEWER ONLY

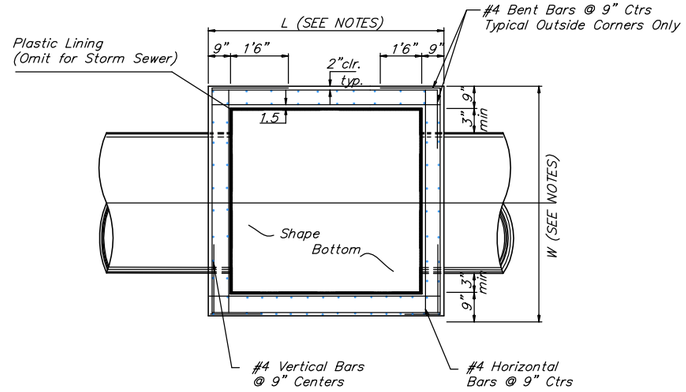

NOTE:
Bend Bars Not More Than 8" to Clear Pipes, or Cut Bars 2" Clear of Pipe, as Necessary.

TOP VIEW

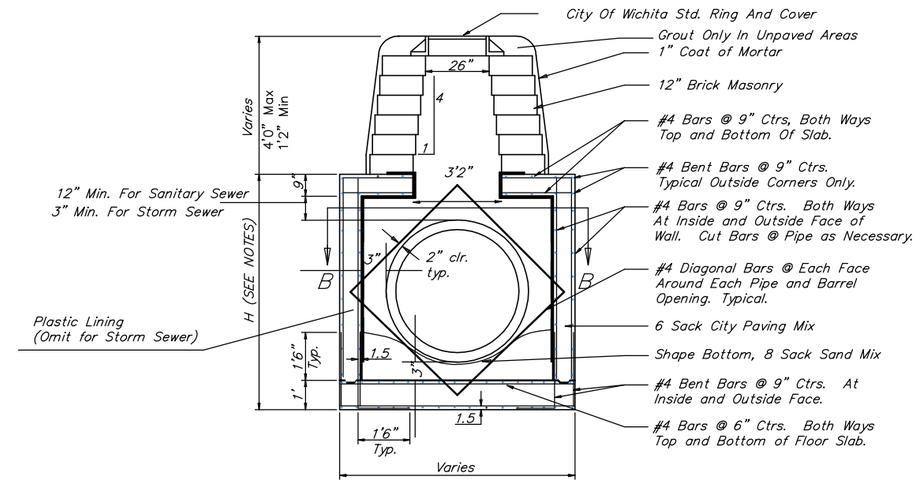

REINFORCED CONCRETE MANHOLE
MANHOLE STACK 2.33' TO 4'0"

GENERAL NOTES:

1. MORTAR USED IN MASONRY CONSTRUCTION SHALL CONTAIN 8 SACKS OF CEMENT PER CUBIC YARD. CONCRETE USED IN MANHOLE WALLS AND BASES SHALL CONFORM TO THE REQUIREMENTS FOR CONCRETE PAVEMENT CONSTRUCTION AS SPECIFIED IN THE CITY STANDARD PAVING SPECIFICATIONS, USING CITY CONCRETE PAVEMENT MIX WITHOUT AIR ENTRAINING ADMIXTURE. MORTAR SHALL BE PLACED AROUND THE MANHOLE RING AS SHOWN ON THE DRAWINGS WHEN MANHOLES ARE CONSTRUCTED IN UNPAVED AREAS. COMPLETED MANHOLE SHALL BE WITHOUT LEAKS AND WATER TIGHT.

2. THE FLOORS OF ALL MANHOLES SHALL BE SHAPED WITH FLOW CHANNELS SUCH THAT THE MANHOLES WILL BE SELF CLEANING. USING 8-SACK SAND MIX CONCRETE. FLOW CHANNELS SHALL BE FORMED TO MATCH THE BOTTOM HALVES OF THE INFLOWING PIPES AND THE OUTFLOWING PIPE. MANHOLE FLOORS SHALL HAVE SLOPES OF 3 INCHES PER FOOT IN THE AREAS OUTSIDE OF THE FLOW CHANNELS SLOPED TOWARD THE FLOW CHANNELS.

3. MANHOLE COVER CASTINGS AND MANHOLE FRAME CASTINGS SHALL CONFORM TO THE RE- QUIREMENTS AS INDICATED IN THE STANDARD SPECIFICATIONS AND AS SHOWN IN THE STANDARD DETAIL DRAWING.

4. THE ENDS OF ALL PIPES IN MANHOLES SHALL BE CUT OFF FLUSH WITH THE INSIDE FACE OF MANHOLE WALL.

5. "L" & "W" SHALL BE AS SPECIFIED IN THE PLANS.

6. REINFORCED CONCRETE MANHOLES SHALL BE USED WHEN PIPE SIZES ARE LARGER THAN 36".

7. BRICK MASONRY STACKS MAY BE SUBSTITUED WITH PRE-CAST BARREL SECTIONS AND CONCENTRIC CONES CONFORMING TO THE REQUIREMENTS OF PRE-CAST MANHOLES. UP TO 18" OF CONCRETE ADJUSTMENT RINGS MAY BE USED TO PROVIDE THE PROPER MANHOLE HEIGHT.

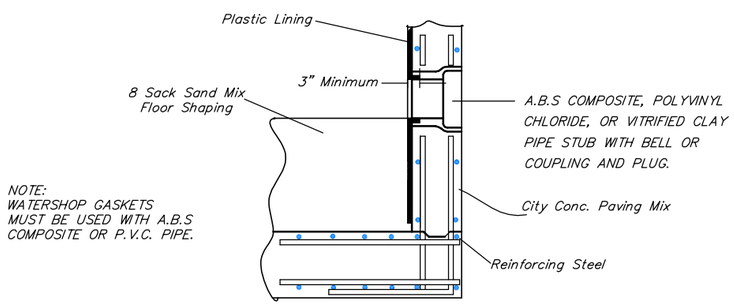

NOTE:
WATERSHOP GASKETS
MUST BE USED WITH A.B.S
COMPOSITE OR P.V.C. PIPE.

PIPE STUB DETAIL
SANITARY SEWER ONLY

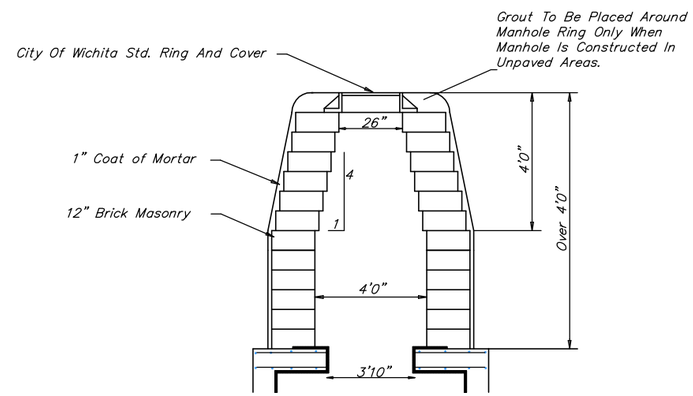

REINFORCED CONCRETE MANHOLE
MANHOLE STACK OVER 4'0"

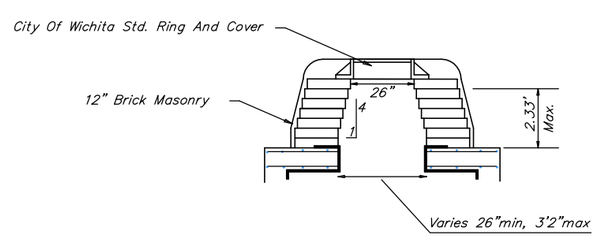

REINFORCED CONCRETE MANHOLE
MANHOLE STACK LESS THAN 2.33'

REV. 1/05/01, MCG

THE CITY OF WICHITA

CITY ENGINEER'S OFFICE
CITY HALL – SEVENTH FLOOR
455 NORTH MAIN STREET
WICHITA, KANSAS 67202
(316) 268-4501
(316) 268-4114 FAX

REINFORCED CONCRETE MANHOLE

JIM ARMOUR, P.E. – CITY ENGINEER

PROJECT NUMBER	INDEX CODE
472-84362	x

DATE	SHEET 23 OF 68
DEC 05	