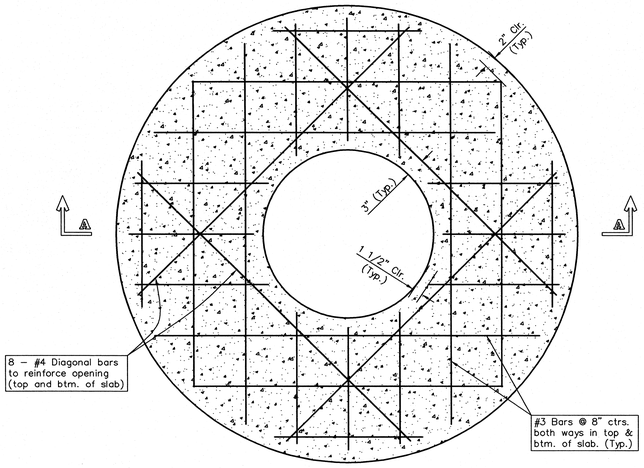


PLAN

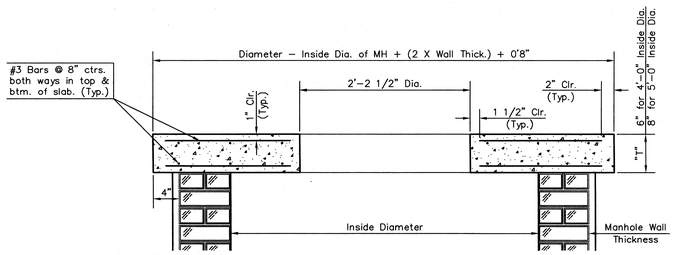


SECTION A–A

FLAT CONCRETE SLAB DETAILS

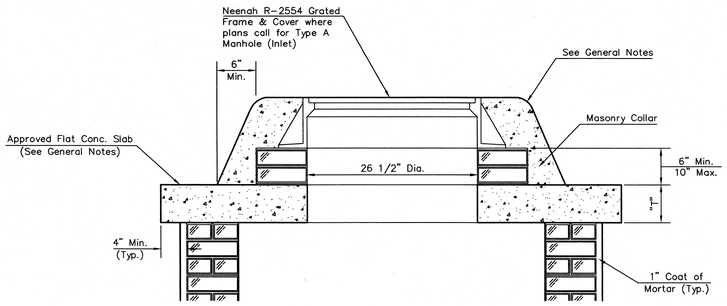


MASONRY COLLAR DETAIL

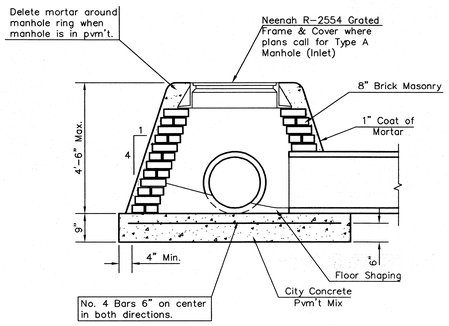


SPECIAL SHALLOW TYPE "A" MANHOLE

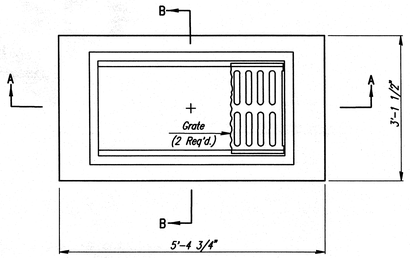


PLAN

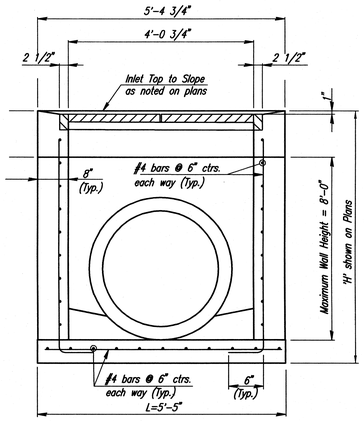


SECTION A–A

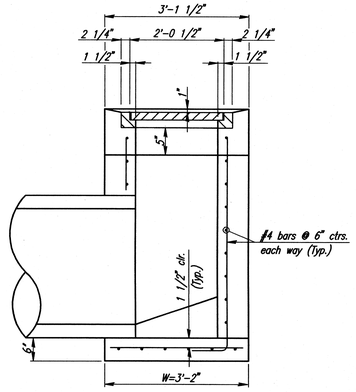


SECTION B–B

STANDARD AREA INLET

## GENERAL NOTES

CONCRETE SHALL HAVE A MINIMUM 28 DAY COMPRESSIVE STRENGTH OF 4000 PSI. ALL PIPES SHALL BE FLUSH CUT PRIOR TO BEING CAST INTO WALLS.

REINFORCING STEEL SHALL BE GRADE 60, A.S.T.M. A615. ALL DIMENSIONS RELATIVE TO PLACEMENT OF REINFORCING ARE TO THE CENTERLINE OF BARS UNLESS OTHERWISE NOTED.

INLET CASTINGS SHALL BE MANUFACTURED USING DUCTILE IRON CONFORMING TO ASTM A536–80 GRADE 65–45–12. DIMENSIONS AND WEIGHTS SHOWN ON THE DETAILED DRAWINGS SHALL BE CONSIDERED AS MINIMUM REQUIREMENTS AND ANY DEVIATIONS FROM THE DIMENSIONS SHOWN MUST BE SPECIFICALLY APPROVED. THE FINISHED CASTINGS SHALL BE OF UNIFORM QUALITY, FREE FROM BLOWHOLES, POROSITY, HARD SPOTS, SHRINKAGE DISTORTIONS OR OTHER DEFECTS.

INLET FLOOR SHALL BE SHAPED WITH UNREINFORCED CONCRETE (8 SACK SAND MIX) TO CREATE FLOW CHANNELS AND TO INCREASE HYDRAULIC EFFICIENCY SUCH THAT THE INLET WILL BE SELF CLEANING BETWEEN ALL INLET AND/OR OUTLET PIPES.

PIPES ENTERING EXISTING STRUCTURE SHALL BE CENTERED ON INSIDE FACE OF WALL.

ALL EXPOSED STRUCTURAL STEEL SHALL BE PAINTED WITH A COAT OF INORGANIC ZINC PRIMER AND THEN WITH A TOP COAT OF OR A FIELD COAT OF ORGANIC ZINC, EACH COAT TO BE 3 TO 4 MILS. STRUCTURAL STEEL USED TO FABRICATE THE SPECIAL AREA INLET FRAME SHALL COMPLY WITH A.S.T.M. A36. WELDING SHALL COMFORM TO THE STRUCTURAL WELDING CODE A.W.S. D1.1–88.

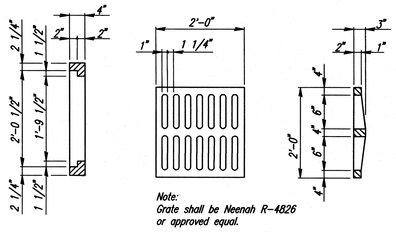


Note:
Grate shall be Neenah R–4826 or approved equal.

GRATE DETAIL
(Wt.=190 lbs.)
(2 Required)

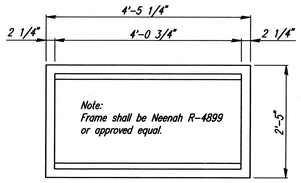


Note:
Frame shall be Neenah R–4899 or approved equal.

FRAME DETAIL
(Wt.=440 lbs.)

Note:
Frame to mate with 2 Neenah R–4826 Grates or approved equal.

## GENERAL NOTES

1. Mortar used in masonry construction shall contain 8 sacks of cement per cubic yard. Concrete used in manhole bases shall conform to the requirements of concrete for concrete pavement construction as specified in the city standard paving specifications using city concrete cement mix without air entraining admixture. Mortar shall be placed around the manhole ring as shown on the drawings when manholes are constructed in unpaved areas. Type "A" shallow manholes can be used on sewers when the manhole is not located within public street pavement. Manholes constructed where pipe sizes are smaller than 24" shall have an inside diameter of 4'. Manholes constructed where pipe sizes are 24" or larger shall have an inside diameter of 5'. Completed manhole shall be without leaks and water tight.

2. Reinforcing steel shall be installed in the manhole bases and shall consist of no. 4 bars placed on 6" centers in both directions. The manhole base reinforcement shall be placed 6" above the bottom of the manhole base. ~~All costs for furnishing and installing reinforcing steel shall be included in the unit price bid for the manhole.~~

3. The floors of all manholes shall be shaped with flow channels such that the manholes will be self cleaning and free of areas where solids could be deposited as sewage flows through the manhole from all inlet pipes to the outlet pipe. Flow channels shall be formed to match the bottom halves of the inflowing pipes and the outflowing pipe as shown by the drawings. Manhole floors shall have slopes of 3 inches per foot in the areas outside of the flow channels sloped toward the flow channels. Pipes laid through manholes shall have the top half removed to neat lines for the full inside diameter of the manhole. Manhole floors shall then be shaped around the bottom half of the pipe which forms the flow channel.

4. Pipes installed within the excavation made for the manhole shall be cradled with concrete to the limits of the manhole excavation. When clay pipe is used, the cradle shall extend to the first joint outside the manhole. The cradle shall be terminated at the clay pipe joint in a manner which will maintain the flexibility of the joint. ~~Cost of cradle within manhole excavation or to clay pipe joints adjacent to manhole shall be included in the unit price bid for the manhole.~~

5. Manhole cover castings and manhole frame castings shall conform to the requirements as indicated in the standard specifications and as shown in the standard detail drawings.

6. The crowns of inflowing pipes shall never be set lower than the crown of the outflowing pipe.

7. ~~Standard shallow manholes type "A" and "B" shall be paid for at the unit price bid per each for the type and diameter indicated. Standard special shallow manholes type "A" and "B" shall be paid for at the unit price bid per each for the type indicated. All standard shallow manhole diameters will be 4' unless indicated otherwise.~~

8. All brick used in manhole construction shall meet Grade SW of ASTM C652 or C62–87.

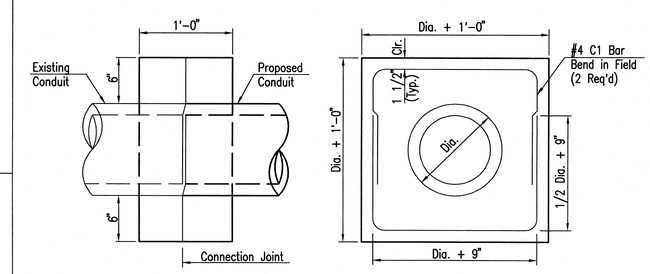


CONCRETE COLLAR DETAIL

Concrete collars shall be provided at connection to existing conduits where shown on the plan, or where, in the opinion of the Engineer, a collar is required for a satisfactory connection. Class II or the mix used in concrete pavement, at the Contractors option, shall be used throughout. See Bending Diagram and views above for reinforcing steel.

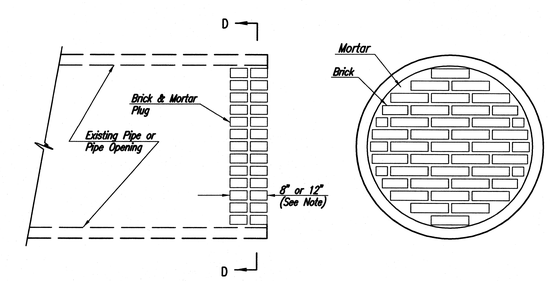


ELEVATION

SECTION D–D

PIPE PLUGGING DETAIL

NOTE: PIPE PLUGS SHALL BE CONSTRUCTED OF BRICK MASONRY. PIPES HAVING DIAMETERS OF 18" OR SMALLER SHALL BE PLUGGED WITH 8" THICK PLUGS. PIPES HAVING DIAMETERS LARGER THAN 18" SHALL BE PLUGGED WITH 12" THICK PLUGS.


Professional Engineering Consultants, P.A.
303 S. TOPEKA • WICHITA, KANSAS 67202 • 316-262-2691 • FAX 316-262-3003
www.pec1.com

GossenLivingston
Architecture
420 South Emporia
Wichita, KS 67202
Tel: (316) 265-9367
Fax: (316) 265-5646
Email: architect@gossenlivingston.com


DARWIN R. CARLSON 14896 12-12-07 TRANSPORTATION ENGINEER


2007 Gossen Livingston Associates, Inc.

All work herein is the exclusive property of Gossen Livingston Associates, Inc. and is not to be copied or used in any way without the express written consent of Gossen Livingston Associates, Inc. All drawings, specification, ideas, designs and arrangements appearing herein constitute the original and unpublished Work of:

Gossen Livingston Associates, Inc.


# NORTH AIR CARGO FACILITY
# MID-CONTINENT AIRPORT
# Wichita, Ks.

| Mark | Date: | Description |
|---|---|---|
| | | |
| | | |
| | | |
| | | |
| | | |
| | | |
| | | |

SWS DETAILS

| | | |
|---|---|---|
| Job No. | 1049.200 | C206 |
| Date | 12/12/07 | |
| Drawn | DRC | |
| Checked | DAR | Dwg. of |


Saved: 12-10-2007 9:29:02 AM by CP
PW: 1049.200 Plot Date: 12-10-2007 9:55:23 AM by CP
Q:\2049\06026\CONSTRUCTION DRAWINGS\06026-C206-SWS DETAILS