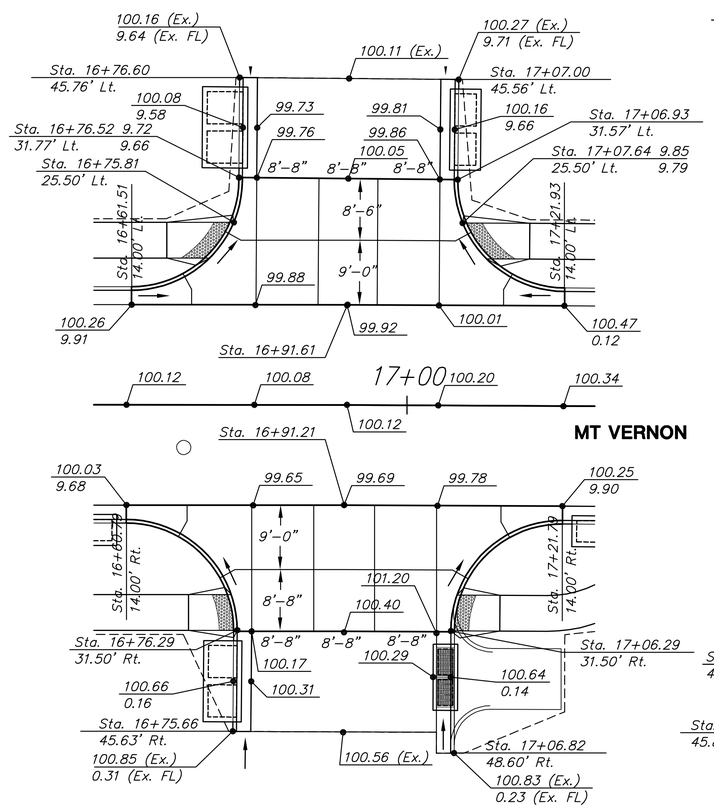

EXCHANGE PLACE, LT. & RT.

Scale: 1"=10'

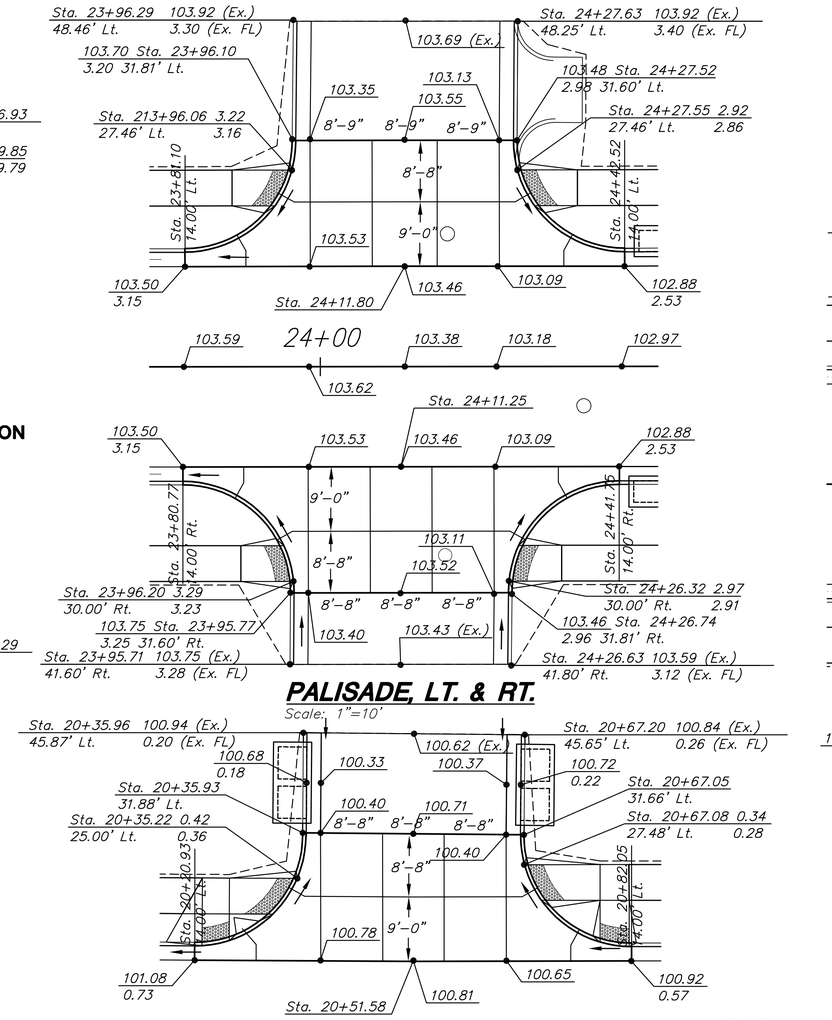

PALISADE, LT. & RT.

Scale: 1"=10'

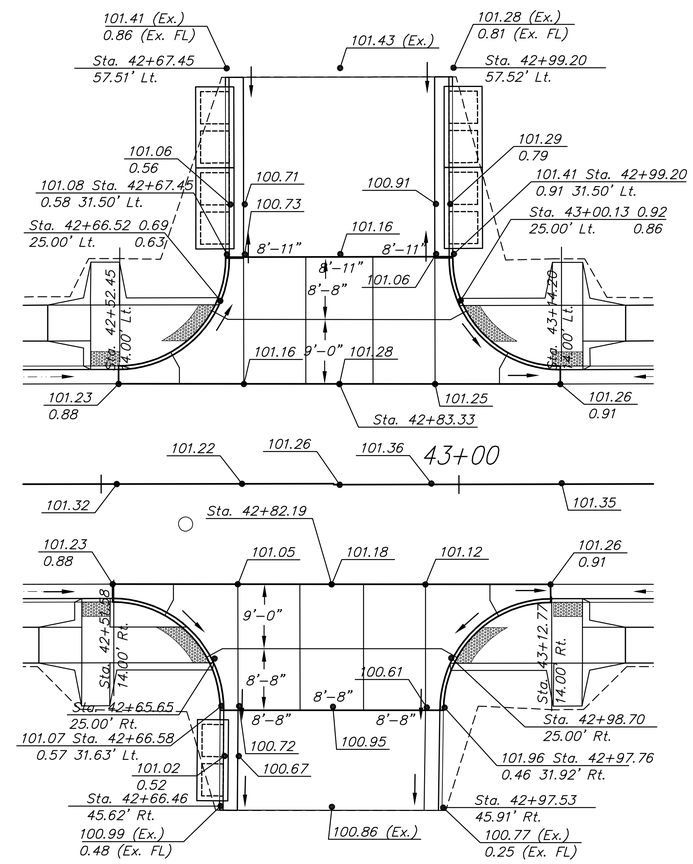

MARKET, LT. & RT.

Scale: 1"=10'

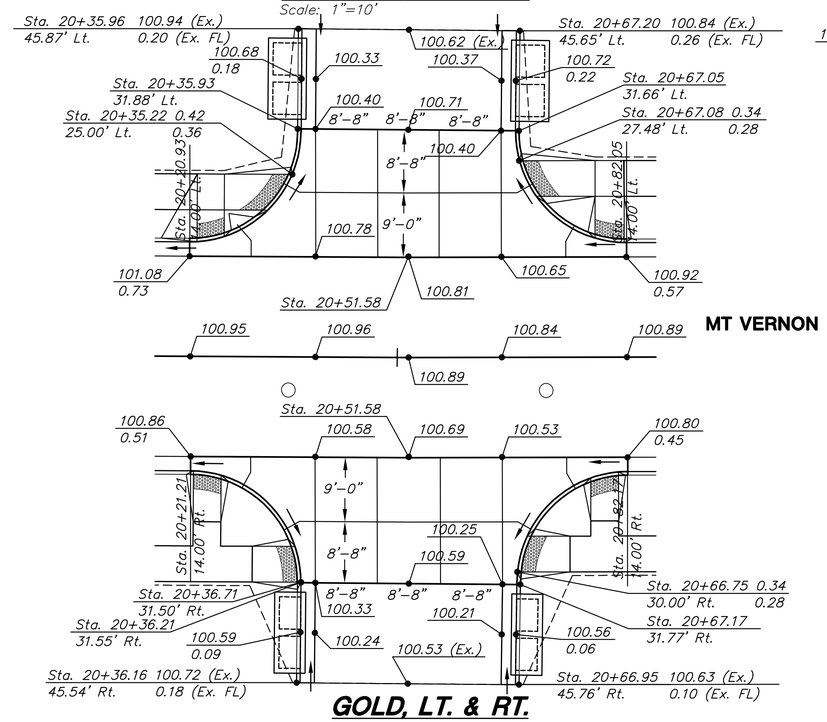

GOLD, LT. & RT.

Scale: 1"=10'

See Sheet 21 for Valley Gutter Details. See Sheet 3 for Side Road Typical Sections.

NOTE:
Concrete Intersections on this sheet are constructed and paid for as "Valley Gutters". Gutter flow does not get carried across the Intersection.

LEGEND

C.J.	Contraction Joint
L.J.	Longitudinal Joint
I.J.	Isolation Joint
T.J.	Tied Construction Joint
D.E.J.	Doweled Expansion Joint
	Valley Gutter Flow Location
100.00	Spot Elevation
100.00 / 100.00 FL	Back of Curb Elevation / Flow Line Elevation
0.00	High Edge of Curb Elevation

MKEC ENGINEERING CONSULTANTS, INC.
411 N. WEBB ROAD
WICHITA, KS. 67206
316 - 684 - 9600

MT VERNON STREET AND DRAINAGE IMPROVEMENTS FROM GREENWAY TO BROADWAY

SIDE ROAD INTERSECTION PLANS

SHEET TITLE

472-84289
448-90385
488-84514

PROJECT NUMBER

DESIGN BY: JRA
DRAWN BY: JSB
CHECKED BY: JRA

ISSUED: May 27, 2008

REVISED

SHEET NO. 18 of 120

J:\CIVIL\056620\DWG\PAV\056620-SR1.DWG

PLOTTED: Tuesday, May 27, 2008 @ 04:30PM