348 PPS

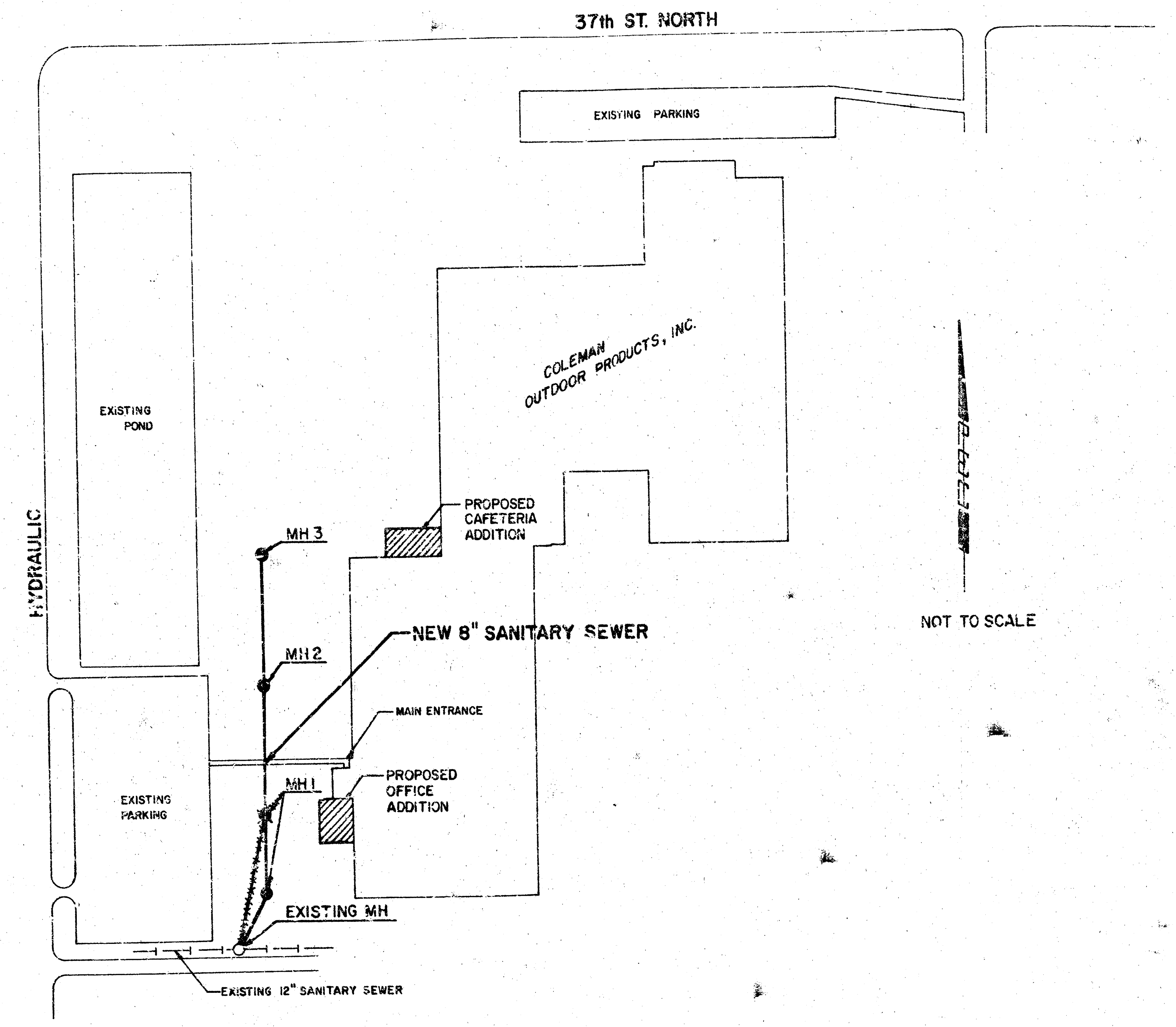

LOCATION MAP

GENERAL NOTES

1. ALL CONSTRUCTION AND MATERIALS SHALL COMPLY WITH CITY OF WICHITA SPECIFICATIONS AND STANDARDS.
2. ALL ELEVATIONS SHOWN ARE PROJECT DATUM. (TO CONVERT TO CITY OF WICHITA DATUM, ADD 44.35' TO ALL ELEVATIONS)
3. THE CONTRACTOR SHALL LIMIT THE EXTENT OF TRENCH TO REMAIN OPEN OVERNIGHT AND WEEKENDS TO LESS THAN 50 FEET.
4. AT LEAST 48 HOURS PRIOR TO BEGINNING EXCAVATION, THE CONTRACTOR SHALL CONTACT MR. DARRELL NEUGEBAUER WITH THE COLEMAN COMPANY, AT (316) 832-6220 TO REQUEST ASSISTANCE IN LOCATING EXISTING BURIED UTILITIES.
5. THE BURIED UTILITIES AS LOCATED ON THE PLANS ARE APPROXIMATE LOCATIONS ONLY. IT SHOULD BE NOTED THAT OTHER BURIED LINES AND CABLES MAY EXIST WHICH ARE NOT SHOWN ON THESE PLANS. THE CONTRACTOR SHALL EXERCISE EXTREME CAUTION DURING TRENCHING OPERATIONS TO AVOID DAMAGING THESE LINES. ANY LINES DAMAGED SHALL BE REPLACED OR REPAIRED IMMEDIATELY AS DIRECTED BY COLEMAN AT THE CONTRACTOR'S EXPENSE.
6. IT SHALL BE THE RESPONSIBILITY OF THE CONTRACTOR TO VERIFY DEPTHS OF EXISTING UTILITIES TO AVOID CONFLICTS WITH THE PROPOSED SANITARY SEWER.
7. THE CONTRACTOR SHALL CONTAIN HIS OPERATIONS TO PERMIT PEDESTRIAN TRAFFIC THROUGH AND ACROSS CONSTRUCTION AT THE EXISTING SIDEWALK AT ALL TIMES. THE CONTRACTOR SHALL ERECT WARNING SIGNS, AND BARRICADES TO ENSURE SAFETY. THE CONTRACTOR SHALL LIMIT THE EXTENT OF TRENCH TO REMAIN OPEN OVERNIGHT AND WEEKENDS TO LESS THAN 50 FEET.
8. THE CONTRACTOR WILL NOT BE REQUIRED TO RESTORE GRASSED AREAS DISTURBED BY CONSTRUCTION OF THE PROPOSED IMPROVEMENTS.
9. THE CONTRACTOR SHALL PROVIDE POSITIVE DRAINAGE AWAY FROM ALL MANHOLE COVERS.
10. THE CONTRACTOR WILL BE RESPONSIBLE FOR MAINTAINING SEWAGE FLOW IN THE EXISTING SANITARY SEWER DURING CONSTRUCTION AS APPROVED BY THE ENGINEER. THE CONTRACTOR SHALL ALSO KEEP ANY CONSTRUCTION DEBRIS FROM ENTERING THE EXISTING SANITARY SEWER. COSTS FOR MAINTAINING SEWAGE FLOW DURING CONSTRUCTION SHALL BE CONSIDERED SUBSIDIARY TO THE OTHER ITEMS OF WORK.
11. A MINIMUM HORIZONTAL DISTANCE OF 10 FEET SHALL BE MAINTAINED BETWEEN WATER AND SEWER LINES. AT POINT WHERE SEWERS CROSS WATER LINES, THE SEWER SHALL BE CONSTRUCTED OF CAST IRON, PLASTIC PIPE WITH SOLVENT WELDED JOINTS, OR PIPE ENCASED IN REINFORCED CONCRETE FOR A DISTANCE OF 10 FEET IN EACH DIRECTION OF THE CROSSING UNLESS THE WATER LINE IS AT LEAST 2 FEET ABOVE THE SEWER. REINFORCED CONCRETE ENCASEMENT, IF REQUIRED, SHALL BE PAID FOR AT THE ADD-ALTERNATE PRICE BID PER L.F. FOR REINFORCED CONCRETE ENCASEMENT.
12. EXCESS EXCAVATED MATERIAL AND OTHER DEBRIS SHALL BE WASTED ON SITES TO BE PROVIDED BY THE CONTRACTOR AS APPROVED BY COLEMAN AT NO ADDITIONAL COST TO THE OWNER.

    ALL DISPOSAL SITES MUST BE APPROVED BY THE KANSAS DEPARTMENT OF HEALTH AND ENVIRONMENT. MATERIAL EITHER STOCKPILED OR DISPOSED OF IN A FLOOD PLAIN WOULD REQUIRE A KANSAS STATE BOARD OF AGRICULTURE PERMIT. ANY MATERIAL DUMPED IN WATERS OF THE UNITED STATES OR WETLANDS IS SUBJECT TO U.S. CORPS. OF ENGINEERS PERMITTING REGULATIONS. ANY MATERIAL BURIED OR STOCKPILED BEYOND APPROVED CONSTRUCTION LIMITS MAY REQUIRE ARCHAEOLOGICAL INVESTIGATIONS UNLESS BURIED IN A PREVIOUSLY APPROVED BORROW LOCATION.
13. THE CONTRACTOR SHALL MAINTAIN CONSTRUCTION RECORDS OF THE HORIZONTAL AND VERTICAL LOCATIONS OF THE SANITARY SEWER SUCH THAT RECORD DRAWINGS CAN BE PREPARED UPON COMPLETION OF CONSTRUCTION.
14. PRIOR TO BEGINNING CONSTRUCTION, THE CONTRACTOR SHALL EXCAVATE THE EXISTING 12" FIRE PROTECTION WATERLINE AT APPROXIMATE SANITARY SEWER STA. 0+55. THE CONTRACTOR SHALL ASCERTAIN THE HORIZONTAL AND VERTICAL LOCATION OF THE FIRE PROTECTION LINE AND REPORT HIS FINDINGS TO THE ENGINEER SO THAT ANY NECESSARY PLAN MODIFICATIONS MAY BE MADE.
15. THE CONSTRUCTION WILL ALSO BE REQUIRED TO EXCAVATE ALL OTHER UTILITY CROSSINGS SUFFICIENTLY AHEAD OF CONSTRUCTION SO THAT ANY NECESSARY PLAN MODIFICATIONS MAY BE MADE.
16. ALL CONSTRUCTION OPERATIONS, INCLUDING SITE ACCESS AND MATERIAL STORAGE AREAS, SHALL BE SCHEDULED AND AUTHORIZED BY MR. DARRELL NEUGEBAUER AS LISTED BELOW:

    MR. DARRELL NEUGEBAUER
    COLEMAN OUTDOOR PRODUCTS, INC.
    3600 N. HYDRAULIC
    WICHITA, KS 67219
    (316) 832-6220
17. THE CONTRACTOR SHALL SCHEDULE HIS OPERATIONS TO FIRST COMPLETE THE SANITARY SEWER FROM STA. 0+00.0 TO ST. 1+93.4 INCLUDING MANHOLE 1. ALL BACKFILL, INSPECTION, AND TESTING SHALL BE APPROVED FOR THIS PORTION OF THE PROJECT PRIOR TO PROCEEDING. ANY ASPHALT PAVEMENT REMOVED WILL NOT BE REPLACED BY THIS CONTRACTOR.

Booked
M-91
8-5-02
RDL

APPROVED AS NOTED
By CITY ENGINEER OF WICHITA

Sanitary Sewers VRH [illegible]
Storm Sewers ____
Driveway Approaches ____
Water Mains ____
Paving ____

RECORD DRAWING
9-2-92 DTB

INSPECTION AND TESTING FOR THIS PROJECT IS TO BE PROVIDED BY A LICENSED CONSULTING ENGINEERING FIRM CONTRACTED BY THE OWNER/DEVELOPER. SAID INSPECTION TO BE IN ACCORDANCE WITH THE CITY OF WICHITA STANDARD CONSTRUCTION ENGINEERING PRACTICES AND CERTIFIED BY A LICENSED PROFESSIONAL ENGINEER. NO WORK SHALL BE PERFORMED IN DEDICATED EASEMENTS OR THE PUBLIC RIGHT-OF-WAY BY THE CONTRACTOR WITHOUT SUCH INSPECTION NOR SHALL ANY WORK BE COMMENCED IN DEDICATED EASEMENTS OR PUBLIC RIGHT-OF-WAY WITHOUT WRITTEN AUTHORIZATION BY THE CITY ENGINEER.

MICHAEL D. SCHOWAKER 6778

No.	Revision	By	Date

COLEMAN OUTDOOR PRODUCTS, INC.

LOCATION MAP AND GENERAL NOTES

PRIVATE SANITARY SEWER EXTENSION (348 PPS)

PROFESSIONAL ENGINEERING CONSULTANTS, P.A.
ENGINEERS
WICHITA, KANSAS

Designed by MDS, RFJ	Job No. 34-92179-1	Sht. 1 of 4
Drawn by STM	Date June, 1992	

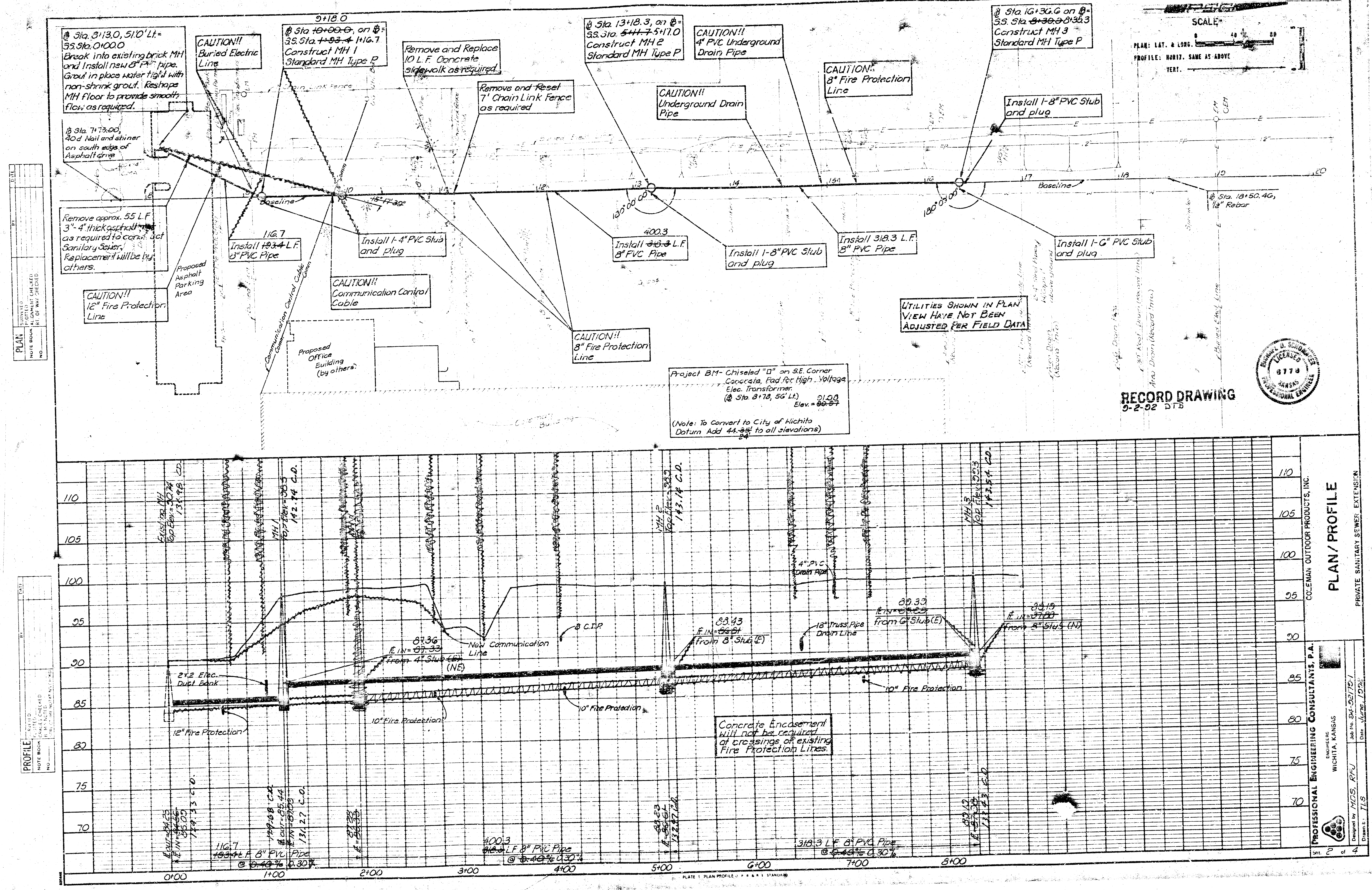
9+18.0
℄ Sta. 8+13.0, 51.0' Lt. = SS. Sta. 0+00.0
Break into existing brick MH and Install new 8" PVC pipe. Grout in place water tight with non-shrink grout. Reshape MH floor to provide smooth flow as required.
CAUTION!! Buried Electric Line
℄ Sta ~~10+00.0~~, on ℄ = SS. Sta. ~~1+93.4~~ 1+16.7 Construct MH 1 Standard MH Type P
Remove and Replace 10 L.F. Concrete sidewalk as required
Remove and Reset 7' Chain Link Fence as required
℄ Sta. 13+18.3, on ℄ = SS. Sta. ~~5+11.7~~ 5+17.0 Construct MH 2 Standard MH Type P
CAUTION!! 4" PVC Underground Drain Pipe
CAUTION!! Underground Drain Pipe
CAUTION!! 8" Fire Protection Line
℄ Sta. 16+30.6 on ℄ = SS. Sta. ~~8+30.3~~ 8+35.3 Construct MH 3 Standard MH Type P
Install 1-8" PVC Stub and plug
SCALE
PLAN: LAT. & LONG.
0
40
80
PROFILE: HORIZ. SAME AS ABOVE
VERT.
℄ Sta. 7+73.00, 40d Nail and shiner on south edge of Asphalt drive
Chain Link Fence
Baseline
45° 17' 39"
10
12
13
14
15
16
17
18
19
20
130° 00' 00"
180° 03' 00"
℄ Sta. 18+50.46, ½" Rebar
Remove approx. 55 L.F. 3"-4" thick asphalt as required to construct Sanitary Sewer. Replacement will be by others.
116.7
Install ~~193.4~~ L.F. 8" PVC Pipe
Install 1-4" PVC Stub and plug
400.3
Install ~~318.3~~ L.F. 8" PVC Pipe
Install 1-8" PVC Stub and plug
Install 318.3 L.F. 8" PVC Pipe
Install 1-6" PVC Stub and plug
CAUTION!! 12" Fire Protection Line
Proposed Asphalt Parking Area
CAUTION!! Communication Control Cable
Communication Control Cable
Comm
CAUTION!! 8" Fire Protection Line
Proposed Office Building (by others)
Buried Elect. Line
Area Drain (Record Info)
Coleman Building
110
105
100
95
90
85
80
75
70
Existing MH Top Elev. = 30.74 134.98 C.D.
MH 1 Top Elev. = 98.5 142.74 C.D.
MH 2 Top Elev. = 98.9 143.14 C.D.
MH 3 Top Elev. = 99.3 143.54 C.D.
87.36
℄ IN = ~~87.33~~ from 4" Stub ~~(E)~~ (NE)
New Communication Line
8 C.I.P.
2x2 Elec. Duct Bank
12" Fire Protection
10" Fire Protection
10" Fire Protection
88.43
℄ IN = ~~86.81~~ from 8" Stub (E)
4" PVC Drain Pipe
18" Truss Pipe Drain Line
89.39
℄ IN = ~~89.89~~ from 6" Stub (E)
89.19
℄ IN = ~~87.80~~ from 8" Stub (N)
10" Fire Protection
℄ OUT = 84.25 ℄ IN = ~~84.66~~ 85.00 129.33 C.D.
129.68 C.D. ℄ OUT = 85.44 ℄ IN = 87.09 131.27 C.O.
87.28 ℄ = ~~86.33~~
88.23 ℄ = ~~86.64~~ 132.47 C.D.
89.12 ℄ = ~~87.58~~ 133.43 C.D.
116.7 ~~193.4~~ L.F. 8" PVC Pipe @ ~~0.40%~~ 0.30%
400.3 ~~318.3~~ L.F. 8" PVC Pipe @ ~~0.40%~~ 0.30%
318.3 L.F. 8" PVC Pipe @ ~~0.40%~~ 0.30%
0+00
1+00
2+00
3+00
4+00
5+00
6+00
7+00
8+00
PLATE 1 PLAN PROFILE U. P. R. & R. E. STANDARD

UTILITIES SHOWN IN PLAN VIEW HAVE NOT BEEN ADJUSTED PER FIELD DATA

Project BM - Chiseled "□" on S.E. Corner Concrete Pad for High Voltage Elec. Transformer. (℄ Sta. 8+78, 56' Lt.) Elev. = ~~90.97~~ 91.08

(Note: To Convert to City of Wichita Datum Add 44.~~35~~24' to all elevations)

Concrete Encasement will not be required at crossings of existing Fire Protection Lines.

RECORD DRAWING
9-2-92 DTB

HOWARD D. SCHUMACHER
LICENSED
6778
KANSAS
PROFESSIONAL ENGINEER

PLAN
NOTE BOOK
NO.
SURVEYED
PLOTTED
ALIGNMENT CHECKED
RT. OF WAY CHECKED

PROFILE
NOTE BOOK
NO.
SURVEYED
PLOTTED
GRADES CHECKED
B.M. NOTED
STRUCTURE NOTATIONS CHECKED

COLEMAN OUTDOOR PRODUCTS, INC.

PLAN / PROFILE

PRIVATE SANITARY SEWER EXTENSION

PROFESSIONAL ENGINEERING CONSULTANTS, P.A.
ENGINEERS
WICHITA, KANSAS

Designed by MDS, RFJ
Drawn by TLS
Job No. 34-92175-1
Date June, 1992
Sht. 2 of 4

SEWER APPURTENANCES DETAILS

ADOPTED AS STANDARD DESIGN
BY
CITY OF WICHITA

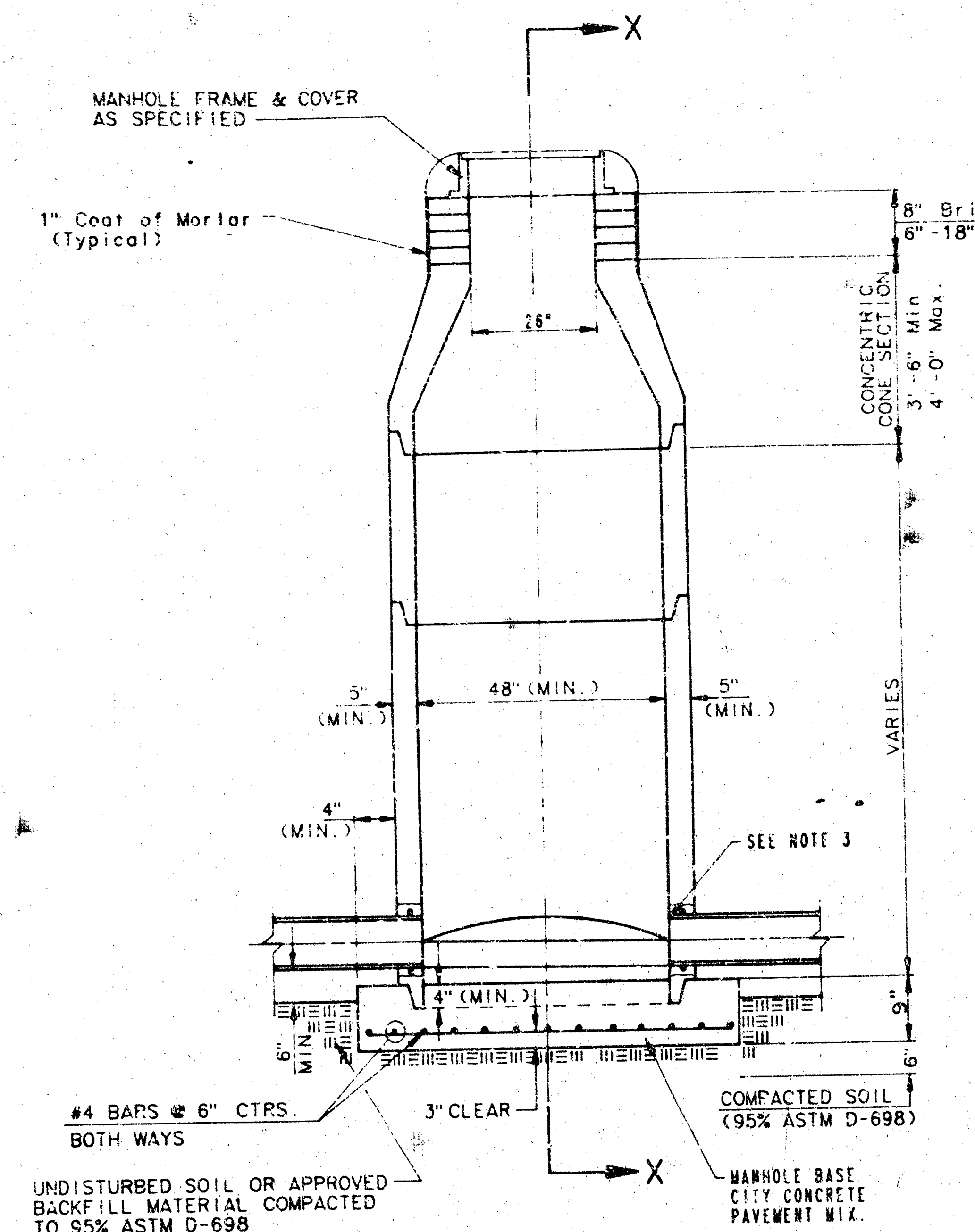
X
MANHOLE FRAME & COVER AS SPECIFIED
1" Coat of Mortar (Typical)
8" Brick Masonry Collar
6" -18"
26"
CONCENTRIC CONE SECTION
3'-6" Min
4'-0" Max.
VARIES
5" (MIN.)
48" (MIN.)
5" (MIN.)
4" (MIN.)
SEE NOTE 3
4" (MIN.)
9"
6" MIN.
6"
#4 BARS @ 6" CTRS. BOTH WAYS
3" CLEAR
COMPACTED SOIL (95% ASTM D-698)
UNDISTURBED SOIL OR APPROVED BACKFILL MATERIAL COMPACTED TO 95% ASTM D-698
MANHOLE BASE CITY CONCRETE PAVEMENT MIX.
X

TYPE P
STANDARD MANHOLE

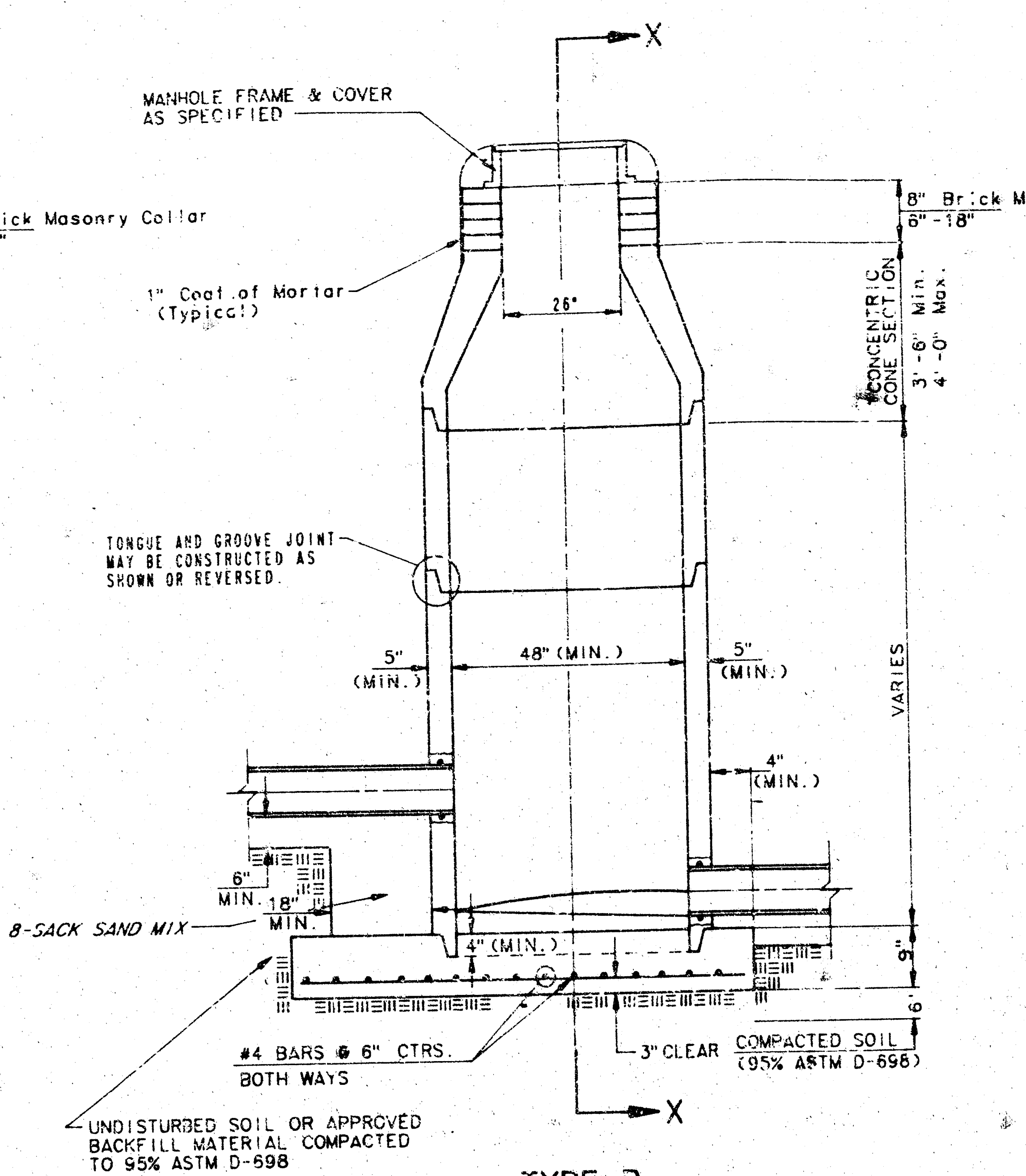
X
MANHOLE FRAME & COVER AS SPECIFIED
8" Brick Masonry Collar
6" -18"
1" Coat of Mortar (Typical)
26"
CONCENTRIC CONE SECTION
3'-6" Min.
4'-0" Max.
TONGUE AND GROOVE JOINT MAY BE CONSTRUCTED AS SHOWN OR REVERSED.
5" (MIN.)
48" (MIN.)
5" (MIN.)
VARIES
4" (MIN.)
6" MIN.
18" MIN.
8-SACK SAND MIX
4" (MIN.)
9"
6"
#4 BARS @ 6" CTRS. BOTH WAYS
3" CLEAR
COMPACTED SOIL (95% ASTM D-698)
UNDISTURBED SOIL OR APPROVED BACKFILL MATERIAL COMPACTED TO 95% ASTM D-698
X

TYPE P
INSIDE DROP MANHOLE

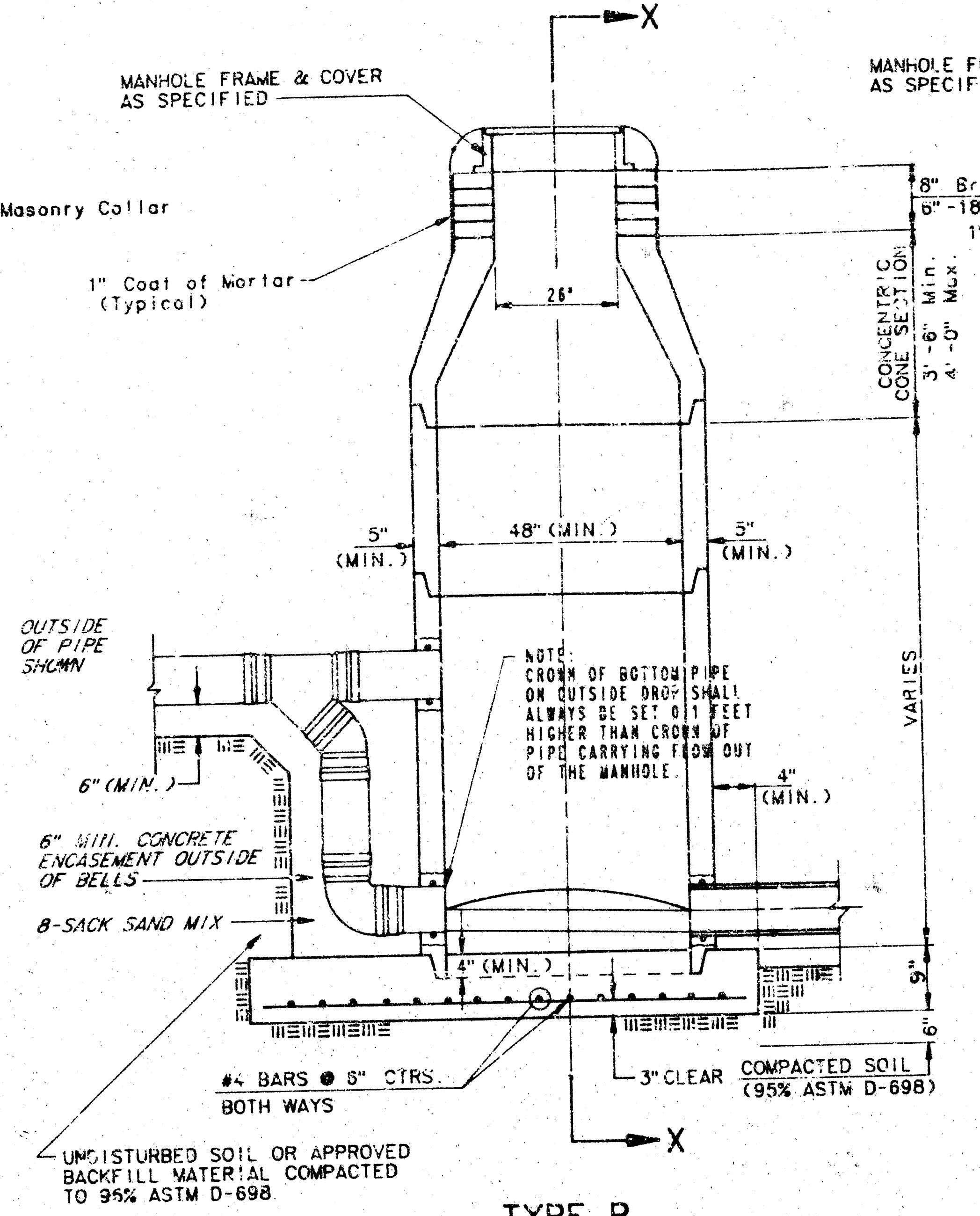
X
MANHOLE FRAME & COVER AS SPECIFIED
1" Coat of Mortar (Typical)
8" Brick Mary Collar
6" -18"
26"
CONCENTRIC CONE SECTION
3'-6" Min.
4'-0" Max.
5" (MIN.)
48" (MIN.)
5" (MIN.)
OUTSIDE OF PIPE SHOWN
NOTE: CROWN OF BOTTOM PIPE ON OUTSIDE DROP SHALL ALWAYS BE SET 0.1 FEET HIGHER THAN CROWN OF PIPE CARRYING FLOW OUT OF THE MANHOLE.
VARIES
6" (MIN.)
4" (MIN.)
6" MIN. CONCRETE ENCASEMENT OUTSIDE OF BELLS
8-SACK SAND MIX
4" (MIN.)
9"
6"
#4 BARS @ 6" CTRS. BOTH WAYS
3" CLEAR
COMPACTED SOIL (95% ASTM D-698)
UNDISTURBED SOIL OR APPROVED BACKFILL MATERIAL COMPACTED TO 95% ASTM D-698
X

TYPE P
OUTSIDE DROP MANHOLE

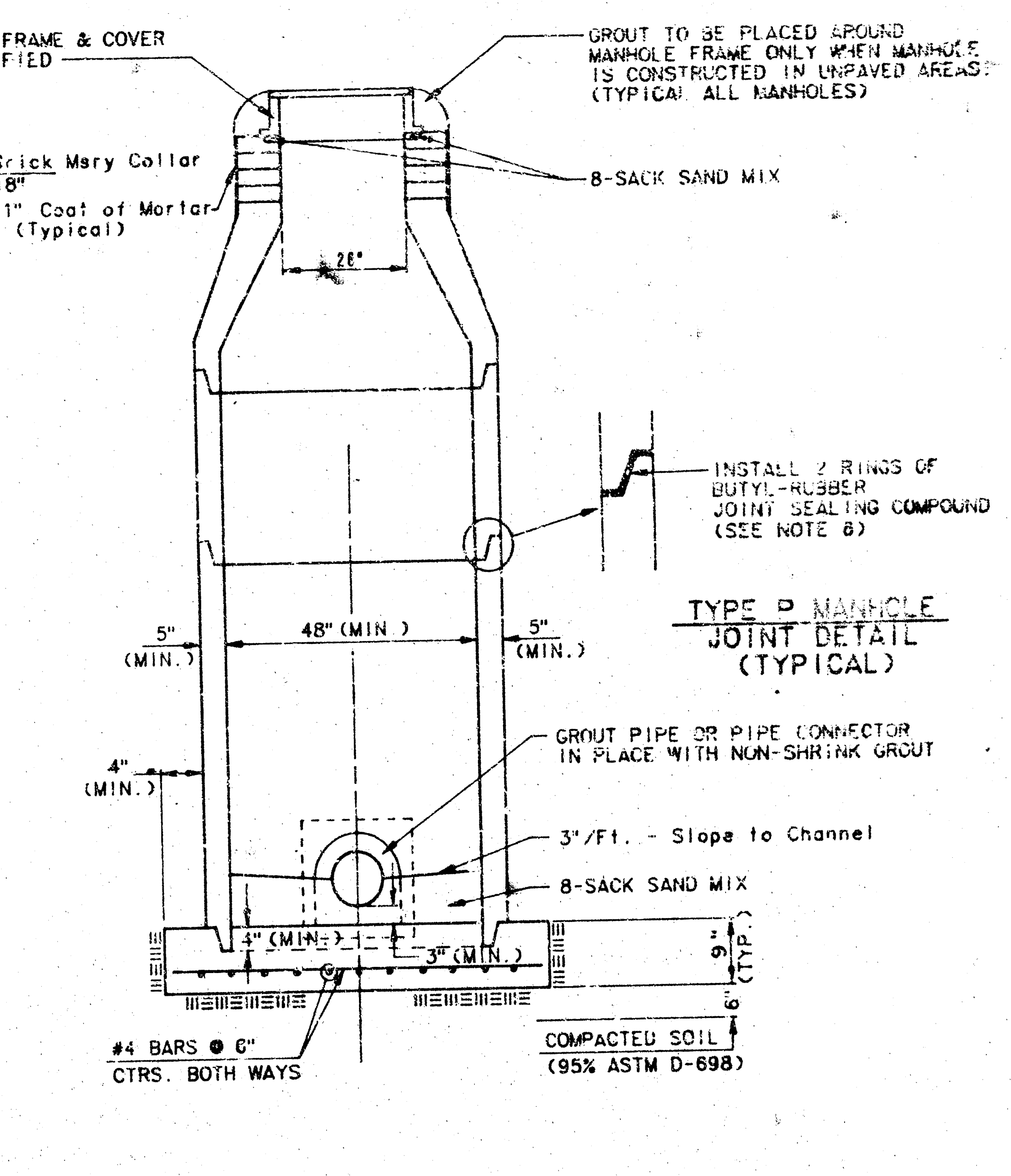
MANHOLE FRAME & COVER AS SPECIFIED
GROUT TO BE PLACED AROUND MANHOLE FRAME ONLY WHEN MANHOLE IS CONSTRUCTED IN UNPAVED AREAS. (TYPICAL ALL MANHOLES)
8-SACK SAND MIX
26"
INSTALL 2 RINGS OF BUTYL-RUBBER JOINT SEALING COMPOUND (SEE NOTE 6)
TYPE P MANHOLE JOINT DETAIL (TYPICAL)
5" (MIN.)
48" (MIN.)
5" (MIN.)
4" (MIN.)
GROUT PIPE OR PIPE CONNECTOR IN PLACE WITH NON-SHRINK GROUT
3"/Ft. - Slope to Channel
8-SACK SAND MIX
4" (MIN.)
3" (MIN.)
9" (TYP.)
6"
#4 BARS @ 6" CTRS. BOTH WAYS
COMPACTED SOIL (95% ASTM D-698)

SECTION X
(TYPICAL)

GENERAL NOTES

PRECAST MANHOLE NOTES

1. ALL PRECAST CONCRETE MANHOLE SECTIONS SHALL CONFORM TO THE LATEST REVISION OF A.S.T.M. C478 AS MODIFIED BY THE SPECIFICATIONS.

2. NON-SHRINK GROUT SHALL BE NON-METALLIC TYPE.

3. APPROVED FLEXIBLE WATERSTOP GASKETS SHALL BE INSTALLED TO JOIN THE SEWER TO THE MANHOLE WALL WHEN A.B.S. COMPOSITE PIPE OR P.V.C. PIPE IS USED. FOR OTHER TYPES OF PIPE THE SEWER SHALL BE GROUTED IN PLACE WITH NON-SHRINK GROUT. THE SEWER PIPE SHALL BE SUPPORTED WITH CONCRETE ENCASEMENT A MINIMUM OF 3 FEET FROM THE MANHOLE WALL AND TO THE FIRST JOINT FOR V.C.P. SUCH THAT THE JOINT REMAINS FLEXIBLE.

4. ALL INSIDE SURFACES OF THE CONCRETE MANHOLE WHICH WOULD BE EXPOSED TO SEWER GAS SHALL BE COATED WITH 2 COATS TNEMEC SERIES 66 HI-BUILD EPOXOLINE, DRY THICKNESS OF 8 MILS (MIN.)

5. EXTERIOR MANHOLE WALLS SHALL BE COATED WITH 1 COAT MOBILARMA 633 BITUMINUS COATING.

6. JOINT SEALING COMPOUND SHALL BE KENT SEAL NO. 2 OR APPROVED EQUAL.

7. PRECAST MANHOLES SHALL BE SET AT LEAST 4 INCHES INTO THE MANHOLE BASE.

8. TOP OF MANHOLE FLOOR SLAB SHALL BE AT LEAST 3 INCHES BELOW THE FLOW LINE OF THE OUTLET PIPE TO INSURE SUFFICIENT MINIMUM THICKNESS OF SHAPED INVERT.

9. LIFTING HOLES SHALL BE FILLED WITH NON-SHRINK GROUT AND THE INTERIOR SURFACE COATED AS SPECIFIED.

10. MORTAR USED IN MASONRY CONSTRUCTION SHALL CONTAIN 8 SACKS OF CEMENT PER CUBIC YARD. CONCRETE USED IN MANHOLE BASES SHALL CONFORM TO THE REQUIREMENTS OF CONCRETE FOR CONCRETE PAVEMENT CONSTRUCTION AS SPECIFIED IN THE CITY STANDARD PAVING SPECIFICATIONS USING CITY CONCRETE PAVEMENT MIX WITHOUT AIR ENTRAINING ADMIXTURE. MORTAR SHALL BE PLACED AROUND THE MANHOLE RING AS SHOWN ON THE DRAWINGS WHEN MANHOLES ARE CONSTRUCTED IN UNPAVED AREAS. MANHOLES CONSTRUCTED WHERE PIPE SIZES ARE SMALLER THAN 24" SHALL HAVE AN INSIDE DIAMETER OF 4'. MANHOLES CONSTRUCTED WHERE PIPE SIZES ARE 24" OR LARGER SHALL HAVE AN INSIDE DIAMETER OF 5'. COMPLETED MANHOLE SHALL BE WITHOUT LEAKS AND WATER TIGHT.

11. REINFORCING STEEL SHALL BE INSTALLED IN THE MANHOLE BASES AND SHALL CONSIST OF NO. 4 BARS PLACED ON 6" CENTERS IN BOTH DIRECTIONS. THE MANHOLE BASE REINFORCEMENT SHALL BE PLACED AT LEAST 3" ABOVE THE BOTTOM OF THE MANHOLE BASE. ALL COSTS FOR FURNISHING AND INSTALLING REINFORCING STEEL SHALL BE INCLUDED IN THE UNIT PRICE BID FOR THE MANHOLE.

12. OPENINGS SHALL BE CUT INTO THE MANHOLE WALL WHEN OUTSIDE DROPS ARE CONSTRUCTED ON EXISTING MANHOLES. SUCH OPENINGS CUT INTO EXISTING MANHOLES SHALL BE AS SMALL AS PRACTICAL TO FACILITATE INSTALLING AND GROUTING THE NEW PIPE IN PLACE. WATERSTOP GASKETS SHALL BE USED WITH P.V.C. AND A.B.S. COMPOSITE PIPE. THE NEW PIPE SHALL BE GROUTED INTO THE OPENING USING AN APPROVED NONSHRINK GROUT FOR THE FULL MANHOLE WALL THICKNESS. THE EXTERIOR OF THE COMPLETED CONNECTION SHALL BE SEALED WITH AN APPROVED BITUMINOUS COATING SUCH THAT THE CONNECTION WILL BE WATER TIGHT. FLOOR OF MANHOLE SHALL BE MODIFIED TO FORM NEW FLOW CHANNEL FOR THE NEW CONNECTION AS INDICATED BY THE DRAWING. THIS WORK, INCLUDING MODIFICATION OF MANHOLE FLOOR. SHALL BE PAID FOR AT THE UNIT PRICE BID FOR OUTSIDE DROP STACK CONSTRUCTED ON EXISTING MANHOLE.

13. THE FLOORS OF ALL MANHOLES SHALL BE SHAPED WITH FLOW CHANNELS SUCH THAT THE MANHOLES WILL BE SELF CLEANING AND FREE OF AREAS WHERE SOLIDS COULD BE DEPOSITED AS SEWAGE FLOWS THROUGH THE MANHOLE FROM ALL INLET PIPES TO THE OUTLET PIPE. FLOW CHANNELS SHALL BE FORMED TO MATCH THE BOTTOM HALVES OF THE INFLOWING PIPES AND THE OUTFLOWING PIPE AS SHOWN BY THE DRAWINGS EXCEPT FOR INSIDE DROP MANHOLES. FLOW CHANNELS FOR INSIDE DROP MANHOLES SHALL BE CONSTRUCTED AS INDICATED BY THE DRAWING. MANHOLE FLOORS SHALL HAVE SLOPES OF 3 INCHES PER FOOT IN THE AREAS OUTSIDE OF THE FLOW CHANNELS SLOPED TOWARD THE FLOW CHANNELS. PIPES LAID THROUGH MANHOLES SHALL HAVE THE TOP HALF REMOVED TO NEAT LINES FOR THE FULL INSIDE DIAMETER OF THE MANHOLE. MANHOLE FLOORS SHALL THEN BE SHAPED AROUND THE BOTTOM HALF OF THE PIPE WHICH FORMS THE FLOW CHANNEL.

14. PIPES INSTALLED WITHIN THE EXCAVATION MADE FOR THE MANHOLE SHALL BE CRADLED WITH CONCRETE TO THE LIMITS OF THE MANHOLE EXCAVATION. WHEN CLAY PIPE IS USED, THE CRADLE SHALL EXTEND TO THE FIRST JOINT OUTSIDE THE MANHOLE. THE CRADLE SHALL BE TERMINATED AT THE CLAY PIPE JOINT IN A MANNER WHICH WILL MAINTAIN THE FLEXIBILITY OF THE JOINT. COST OF CRADLE WITHIN MANHOLE EXCAVATION OR TO CLAY PIPE JOINTS ADJACENT TO MANHOLE SHALL BE INCLUDED IN THE UNIT PRICE BID FOR THE MANHOLE.

15. MANHOLE COVER CASTINGS AND MANHOLE FRAME CASTINGS SHALL CONFORM TO THE REQUIREMENTS AS INDICATED IN THE STANDARD SPECIFICATIONS AND AS SHOWN IN THE STANDARD DETAIL DRAWING.

16. THE VERTICAL FREE FALL DROP INSIDE MANHOLES SHALL NOT EXCEED 2'.

THE CROWNS OF INFLOWING PIPES SHALL NEVER BE SET LOWER THAN THE CROWN OF THE OUTFLOWING PIPE.

17. STANDARD MANHOLES AND STANDARD INSIDE DROP MANHOLES SHALL BE BID AS STANDARD MANHOLES FOR THE TYPE AND DIAMETER INDICATED. OUTSIDE DROP MANHOLES SHALL BE BID AS STANDARD OUTSIDE DROP MANHOLES FOR THE TYPE AND DIAMETER INDICATED. ALL MANHOLE DIAMETERS WILL BE 4' UNLESS INDICATED OTHERWISE.

18. A BRICK MASONRY COLLAR SHALL BE INSTALLED BETWEEN THE CAST IRON FRAME AND THE CONCENTRIC CONE. THE COLLAR WILL HAVE 8" WALLS AND A VERTICAL HEIGHT OF 6" MINIMUM AND 18" MAXIMUM. A 1" COAT OF MORTAR WILL BE PLASTERED ON THE OUTSIDE OF THE COLLAR.

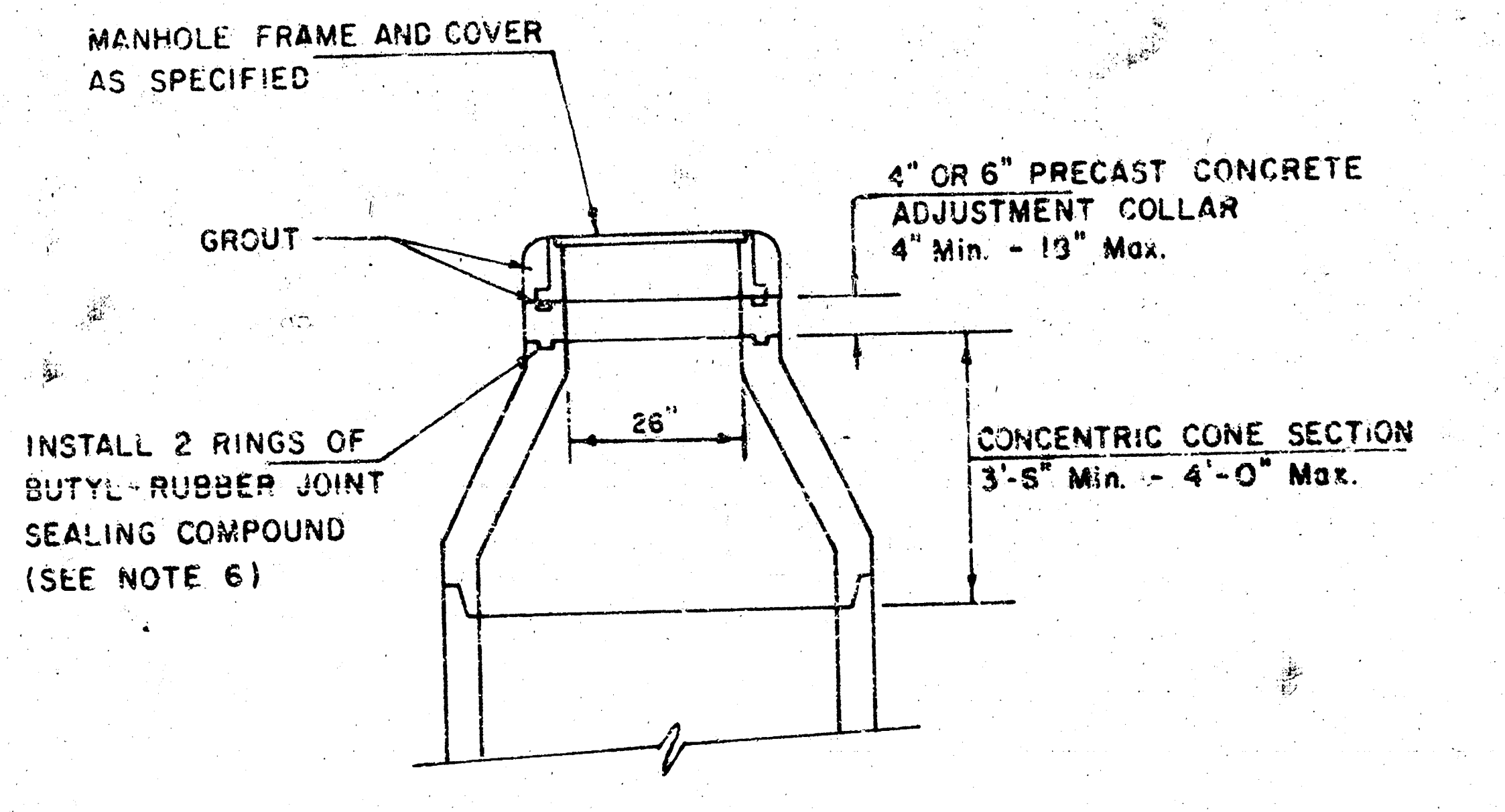
MANHOLE FRAME AND COVER AS SPECIFIED
GROUT
4" OR 6" PRECAST CONCRETE ADJUSTMENT COLLAR 4" Min. - 13" Max.
26"
INSTALL 2 RINGS OF BUTYL-RUBBER JOINT SEALING COMPOUND (SEE NOTE 6)
CONCENTRIC CONE SECTION 3'-5" Min. - 4'-0" Max.

ALTERNATE CONSTRUCTION
IN UNPAVED AREAS

RECORD DRAWING
9-2-92

NOTE NO. 16 REVISED JAN. 1991
Revised 3-21-89
Revised 8-10-88
Sht. 3 of 4 Revised: June 12, 1986

MANHOLE FRAME AND COVER DETAIL

ADOPTED AS STANDARD DESIGN
BY
City of Wichita, Kansas

MANHOLE COVER
Weight: 180 Lbs.

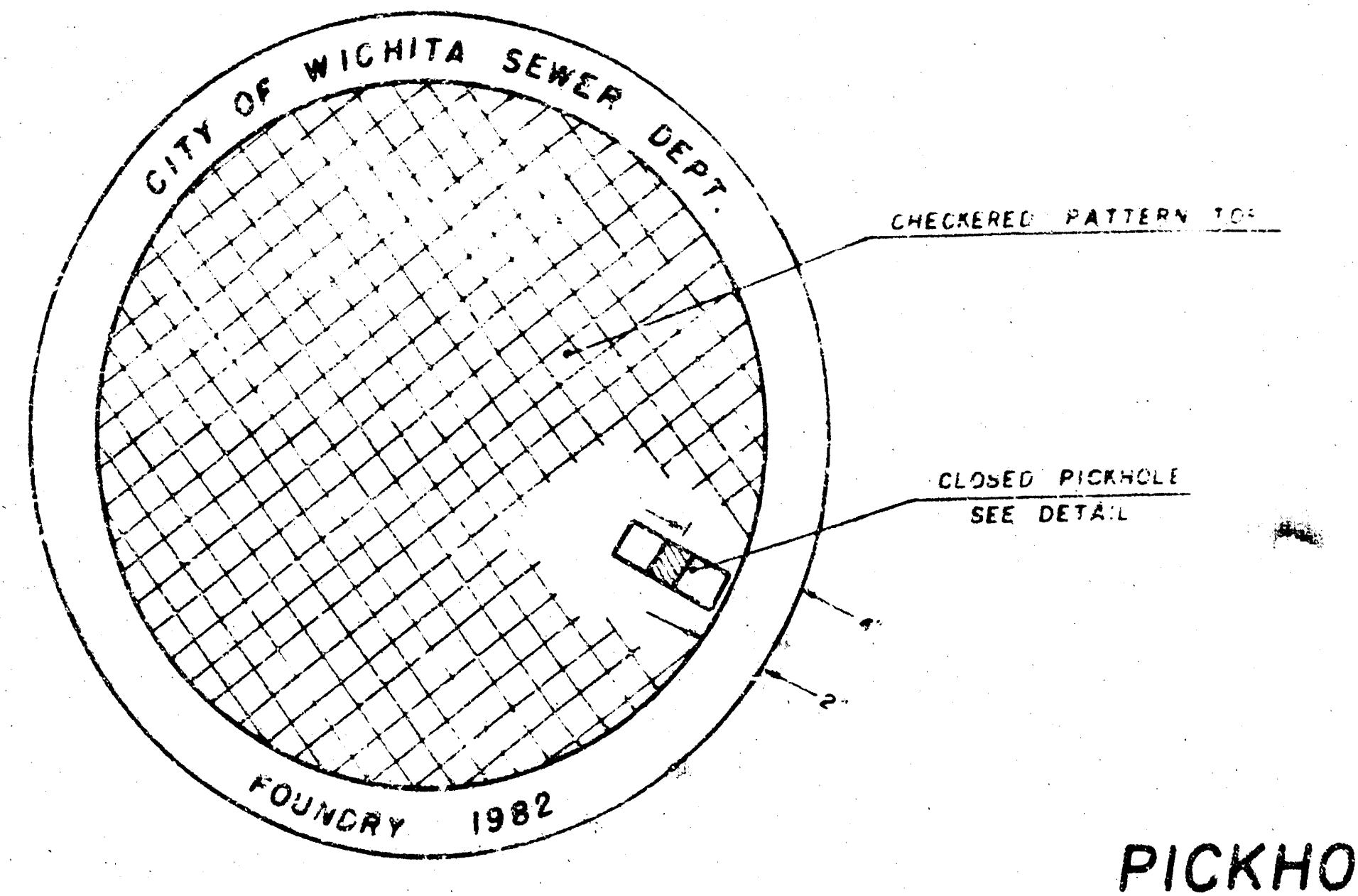
CITY OF WICHITA SEWER DEPT.
FOUNDRY 1982
CHECKERED PATTERN TOP
CLOSED PICKHOLE
SEE DETAIL
4"
2"

TOP VIEW

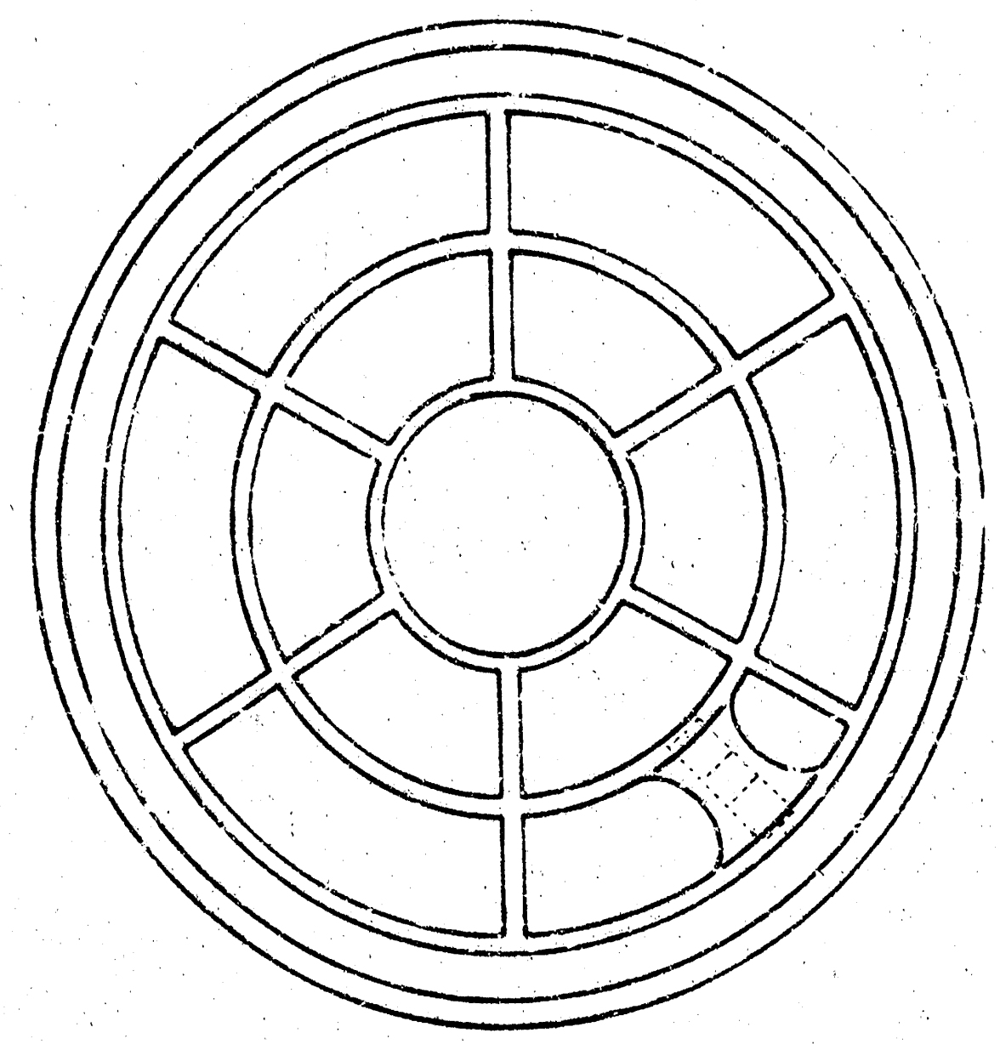

BOTTOM VIEW

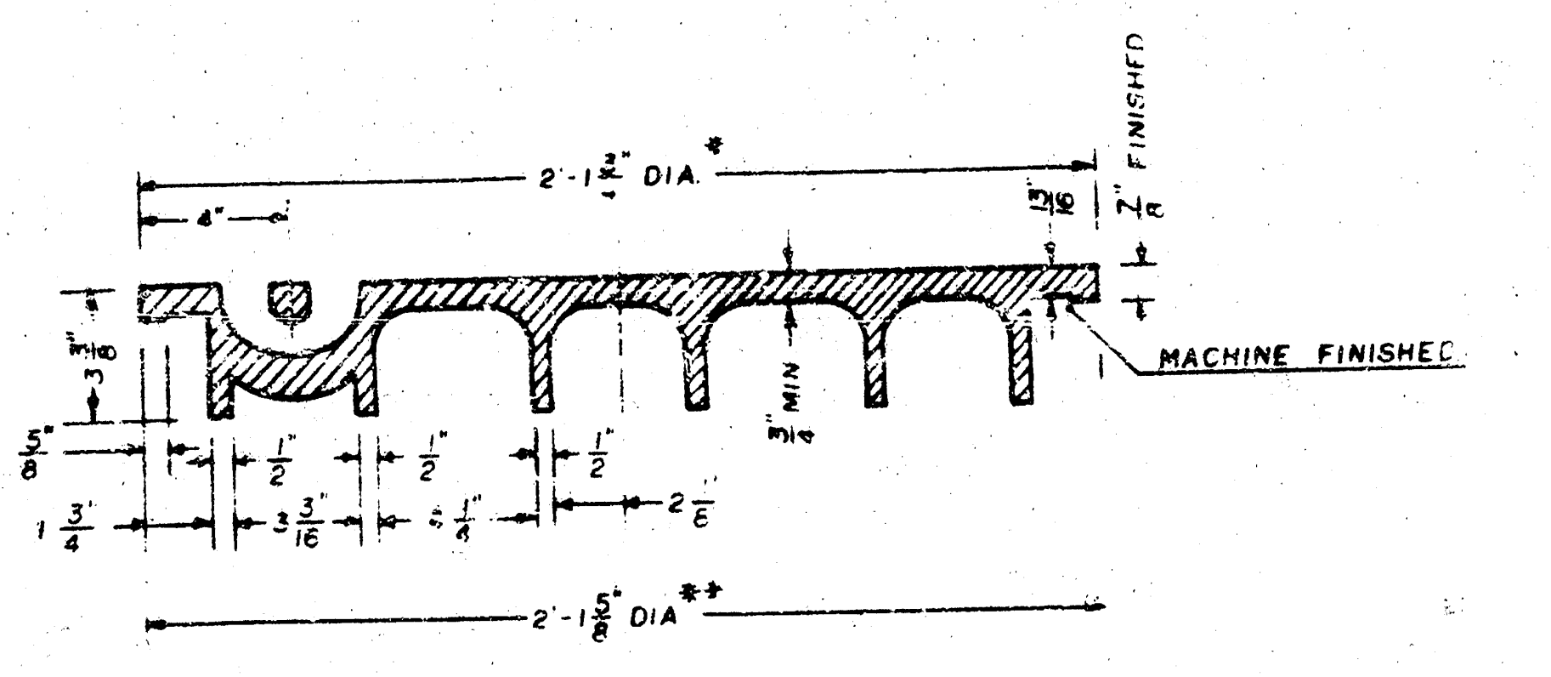
2'-1 3/4" DIA *
4"
FINISHED
7/8"
13/16
MACHINE FINISHED
3/16
MIN
5/8"
1/2"
1/2"
1/2"
1 3/4
3 3/16"
2 1/8
2'-1 5/8" DIA **

SECTION VIEW

* OUTSIDE DIA TOP OF COVER
** OUTSIDE DIA BOTTOM OF COVER

PICKHOLE DETAIL

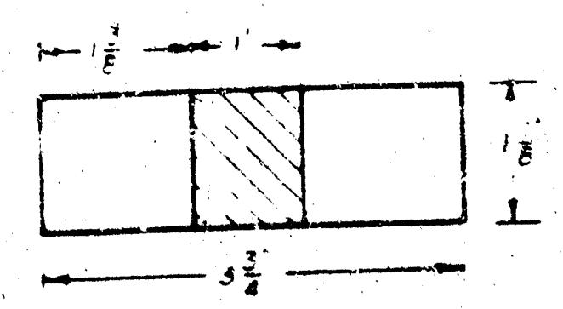
1 3/8
1"
1 3/8
3 3/4

TOP VIEW

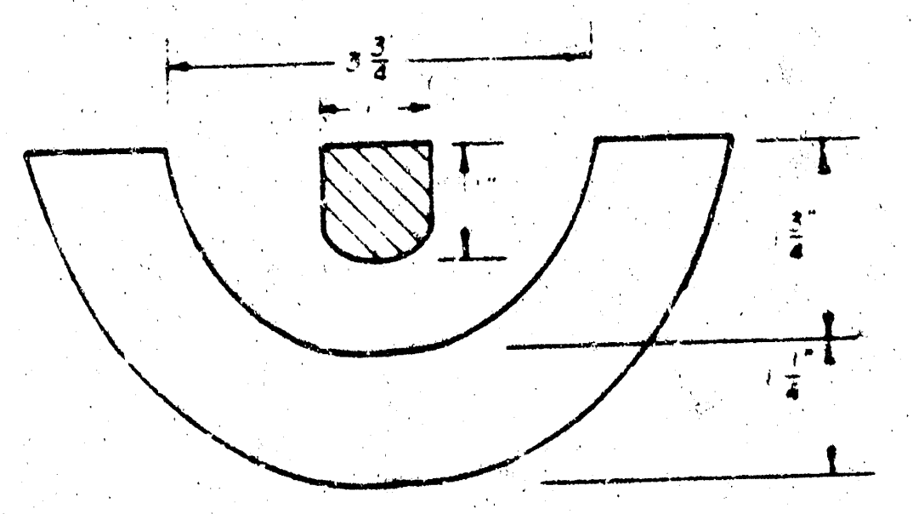
3 3/4
1"
1"
3/4"
1 1/4"

SECTION VIEW

MANHOLE FRAME
Weight: 240 Lbs.

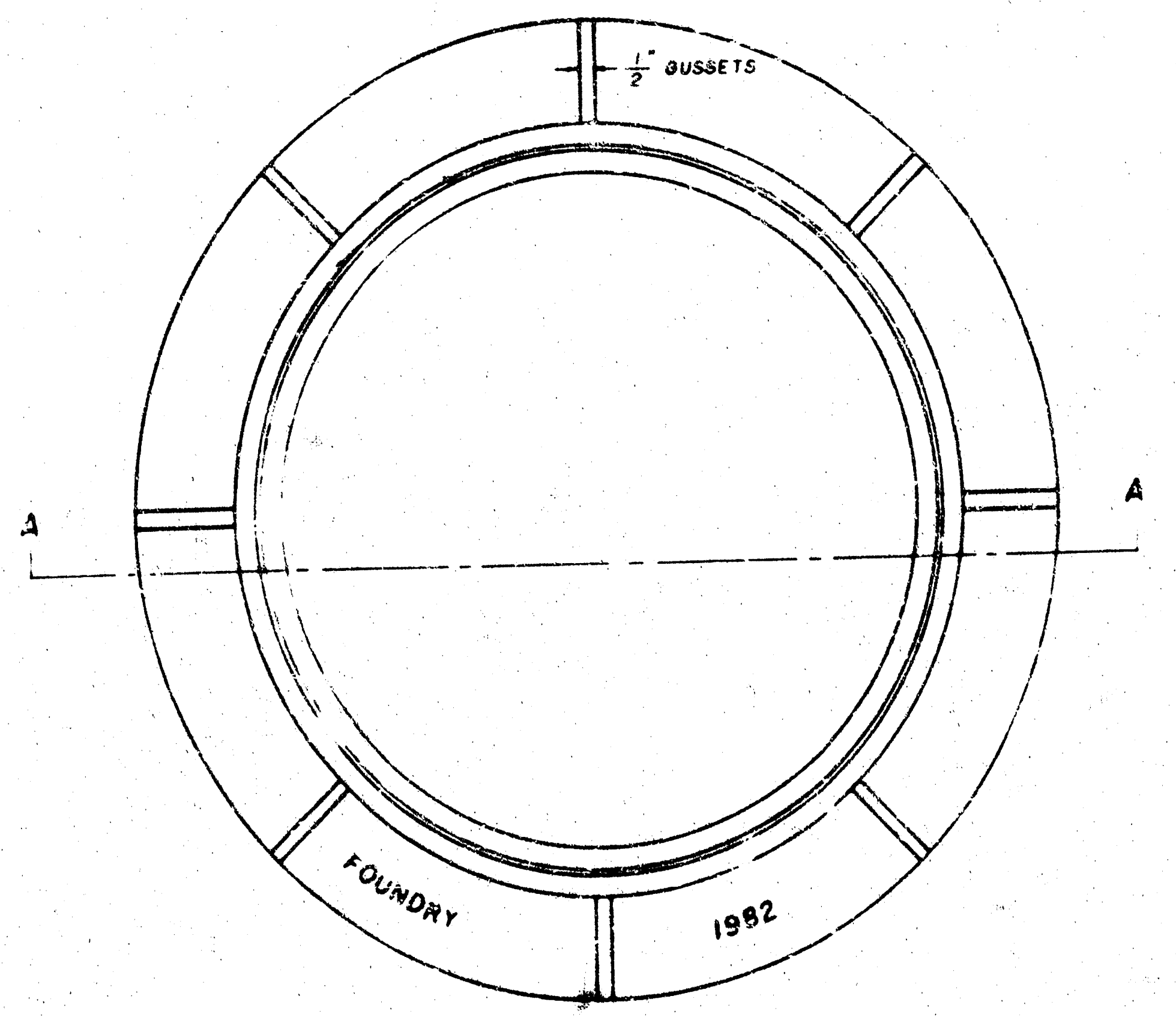
1/2" GUSSETS
A
A
FOUNDRY
1982

TOP VIEW

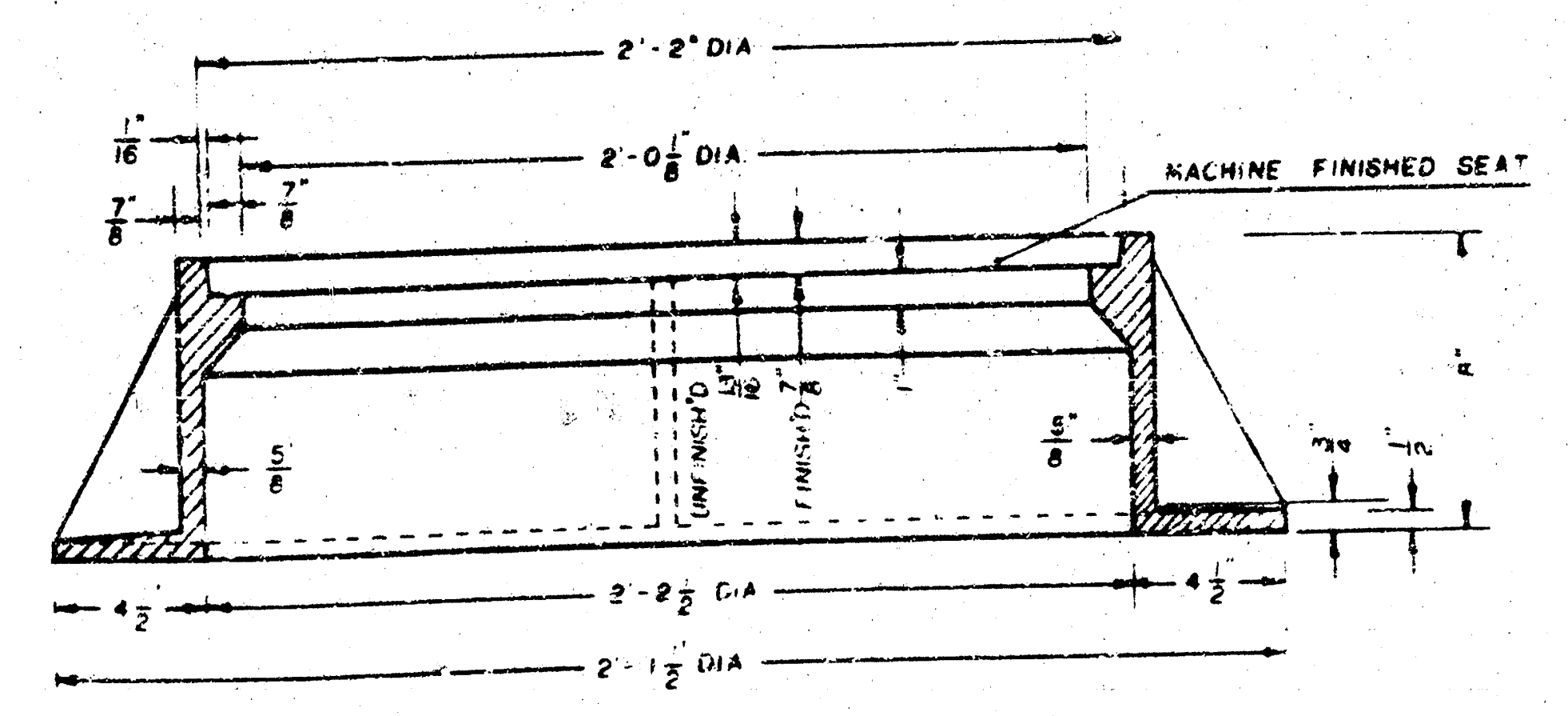
2'-2" DIA
1/16"
7/8"
2'-0 1/8" DIA
7/8"
MACHINE FINISHED SEAT
UNFINISH'D
13/16"
FINISH'D 7/8"
1"
5/8
5/8"
2'-2 1/2 DIA
4 1/2
4 1/2"
2'-1 1/2" DIA

SECTION A-A

GENERAL NOTES

1. MANHOLE CASTINGS SHALL BE MANUFACTURED USING GOOD QUALITY GRAY IRON CONFORMING TO CLASS 30 OF A.S.T.M. DESIGNATION A-48. DIMENSIONS AND WEIGHTS SHOWN ON THE DETAILED DRAWINGS SHALL BE CONSIDERED AS MINIMUM REQUIREMENTS AND ANY DEVIATIONS FROM THE DIMENSIONS SHOWN MUST BE SPECIFICALLY APPROVED. THE FINISHED CASTINGS SHALL BE OF UNIFORM QUALITY, FREE FROM BLOWHOLES, POROSITY, HARD SPOTS. SHRINKAGE DISTORTIONS OR OTHER DEFECTS.

2. MANHOLE CASTINGS SHALL BE COATED WITH AN ASPHALT PAINT RESULTING IN A SMOOTH, TOUGH AND TENACIOUS COATING WHICH IS NOT BRITTLE OR TACKY.

3. MANHOLE CASTINGS SHALL BE MANUFACTURED SUCH THAT A COVER MANUFACTURED BY ANY ONE FOUNDRY WILL FIT INTERCHANGEABLY INTO A FRAME MANUFACTURED BY ANOTHER FOUNDRY AND STILL MEET ALLOWABLE CLEARANCES AND NON-ROCKING REQUIREMENTS. THIS WILL REQUIRE MANUFACTURING OF THE MATCHING FACES ON THE COVER AND THE FRAME TO CLOSE TOLERANCES.

4. THE OUTSIDE CIRCUMFERENCE OF THE VERTICAL FACE OF THE COVER AND THE INSIDE CIRCUMFERENCE OF THE VERTICAL FACE IN THE FRAME RECESS SHALL BE MANUFACTURED TO TOLERANCES SUCH THAT THE CLEARANCE BETWEEN THE COVER AND FRAME WILL NOT EXCEED 1/8" AT ANY POINT AROUND THE CIRCUMFERENCE OF THE COVER. THE SEATING SURFACES BETWEEN THE COVER AND FRAME SHALL BE MACHINED SUCH THAT THESE SURFACES SHALL MAKE FULL CONTACT FOR THEIR FULL CIRCUMFERENCE TO PRECLUDE THE COVER FROM ROCKING IN THE FRAME.

5. THE MANHOLE FRAME AND COVER SHALL BE MARKED WITH LETTERING INDICATING THE NAME OF THE MANUFACTURER AND THE YEAR WHEN THE COVER OR FRAME WAS CAST. THE COVER SHALL BE FURTHER IDENTIFIED WITH REGARDS TO OWNERSHIP USING LETTERS AT LEAST 1" IN HEIGHT. THIS IDENTIFICATION SHALL BE "CITY OF WICHITA SEWER DEPARTMENT". THE WORD DEPARTMENT MAY BE ABBREVIATED. THE TEXTURE OF THE TOP SURFACE OF THE COVER SHALL BE MANUFACTURED IN A CHECKERED PATTERN DESIGN AS INDICATED ON THE DRAWINGS. SMOOTH BLOCKOUTS SHALL BE UTILIZED TO HIGHLIGHT THE LETTERING ON THE COVER SURFACE. THE TOTAL AREA OF SMOOTH SURFACE BLOCKOUT SHALL NOT EXCEED THE AREA AS INDICATED ON THE DRAWING. POSITIONING OF SMOOTH BLOCKOUTS AND LETTERING MAY VARY FROM THAT SHOWN ON THE DETAILED DRAWING.

RECORD DRAWING
9-2-92

JNL DEC. 1981