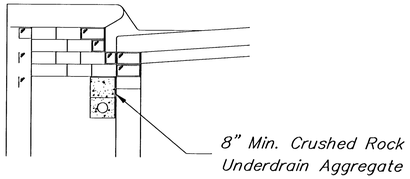

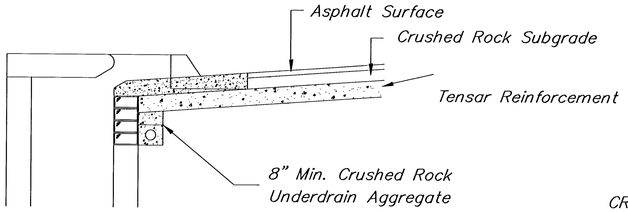

(Min. 16 Perforations Per Lin. Ft. @ 1/4" Dia.)
Perforations To Be on Bottom Half

SECTION A–A

CRUSHED ROCK GRADATION REQUIREMENTS
Percent of Aggregate Retained

1 1/2"	0
3/4"	15–60
# 4	40–80
#40	74–92
P–200	4–12

Rock Quality Shall Be The Same As Specified
For Coarse Aggregate For Asphalt Concrete Mixes.

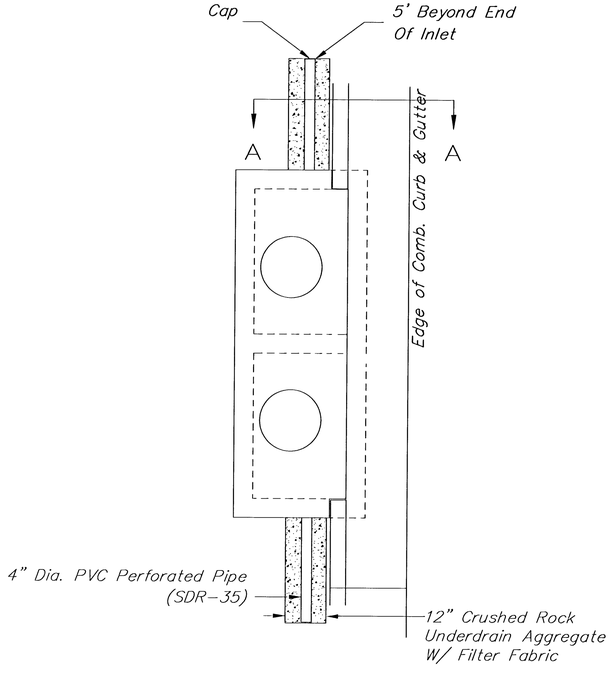

Type 1 & 2 Inlet

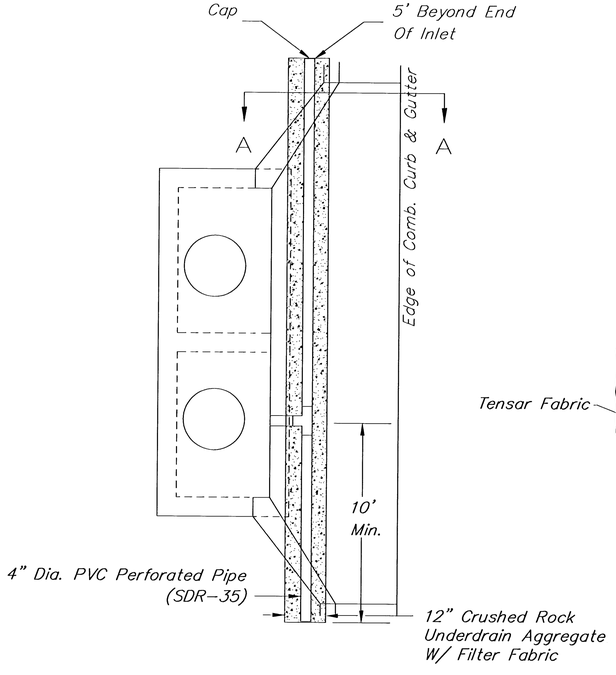

Type 1–A Inlet

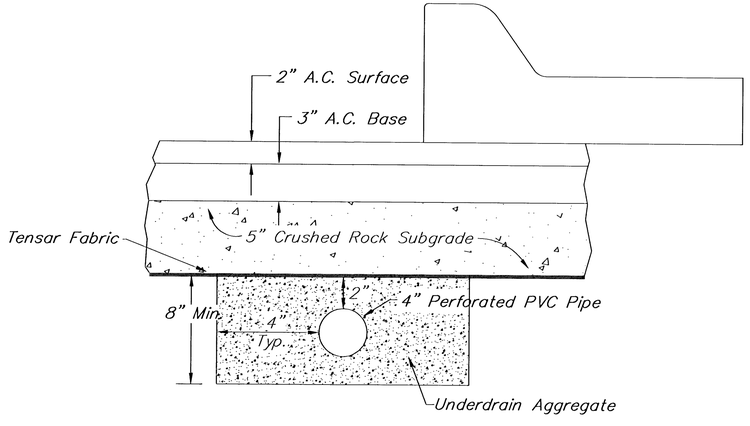

NOTE: Place 4" PVC Perforated Pipe at all drainage sump locations.

Cost of Underdrain System to be incidental to the Reinforced Crushed Rock Subgrade.

PAVEMENT UNDERDRAIN DETAIL

PAVUDRDN1.DWG
REV. 11–22–00, MCG

THE CITY OF WICHITA
CITY ENGINEER'S OFFICE
CITY HALL – SEVENTH FLOOR
455 NORTH MAIN STREET
WICHITA, KANSAS 67202
(316) 268-4501
(316) 268-4114 FAX

PAVEMENT UNDERDRAIN DETAIL

JAMES ARMOUR P.E. – CITY ENGINEER

PROJECT NUMBER	INDEX CODE
DATE JUNE 2006	

No.	Date	By:	Approved:	Revision
△				
△				
△				
△				

OAK CLIFF ESTATES 6TH ADDITION
STORM SEWER IMPROVEMENTS
PAVEMENT UNDERDRAIN DETAIL
CITY OF WICHITA, KANSAS
JAMES ARMOUR, P.E. – CITY ENGINEER
1697 PPS (6078979)

POE & ASSOCIATES, INC.
CONSULTING ENGINEERS
5940 E. Central, Suite 200 ■ Wichita, KS 67208-4242
Phone 316/685-4111 ■ FAX 316/685-4444

FINAL

Designed By: T. Austin/S. Schmidt
Drawn By: S. Schmidt
Poe Job No.: 1821/Oak Cliff/base-swb.dwg
Date: 09/06/06

Sheet
7 of 12