FHWA REGION NO.	STATE	PROJECT NUMBER	FISCAL YEAR	SHEET NUMBER	TOTAL SHEETS
	KANSAS				

DATE	BY	REFERENCES NOTED
		REFERENCES CHECKED

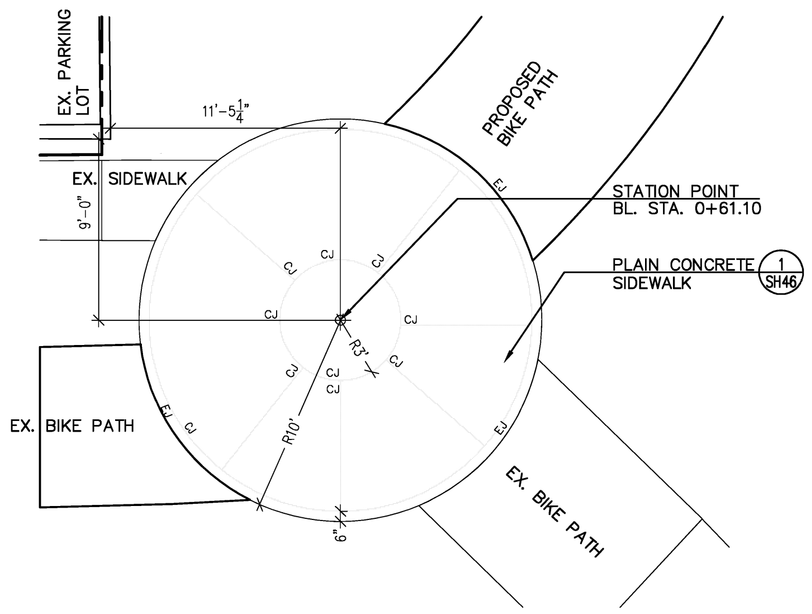

A CENTRAL AVE. CONNECTION

3/16" = 1'-0"

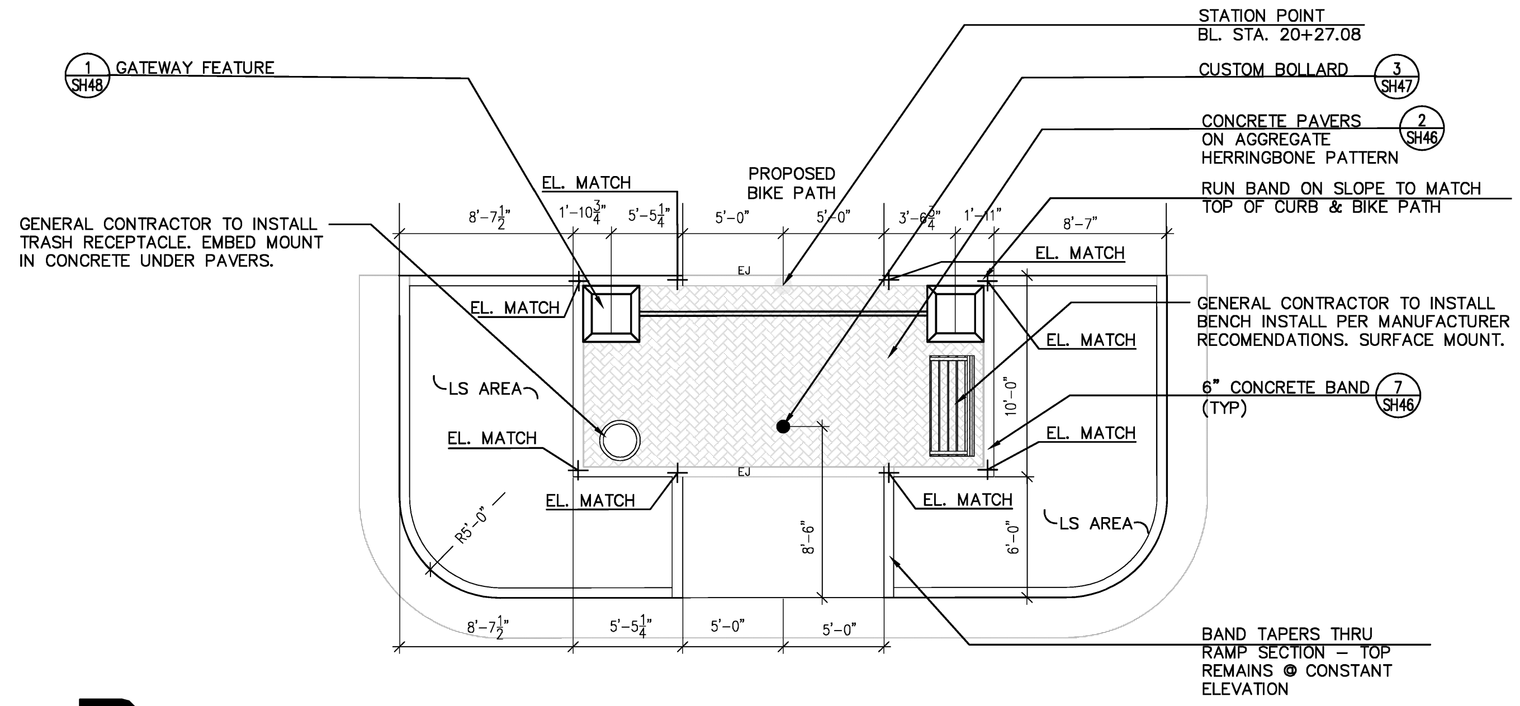

B 8TH ST. GATEWAY FEATURE

3/16" = 1'-0"

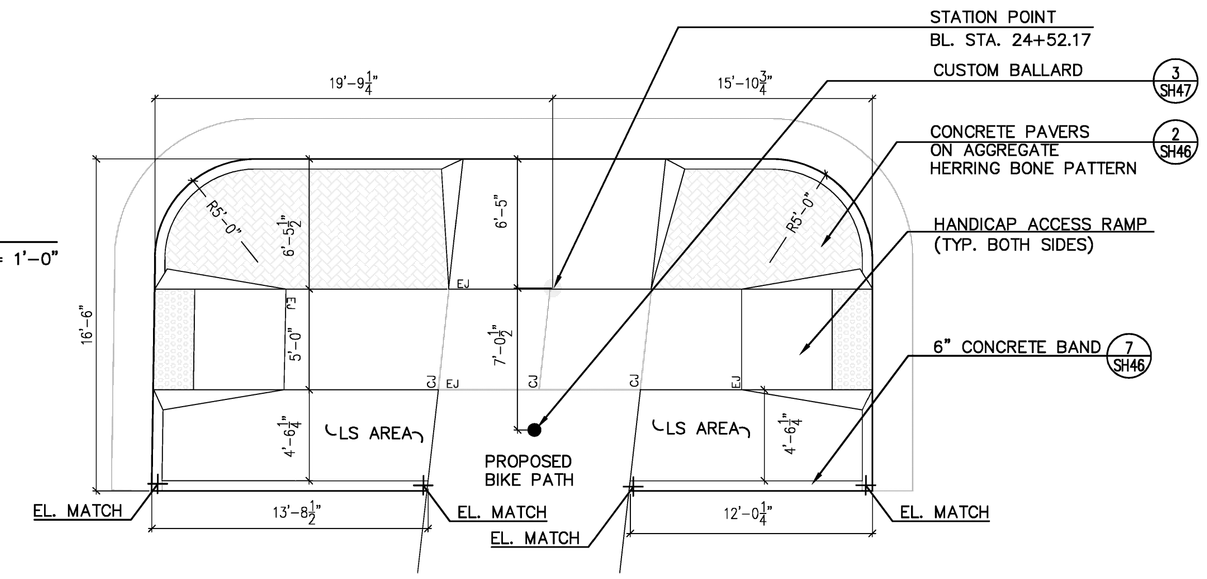

C 9TH ST. CROSSING

3/16" = 1'-0"

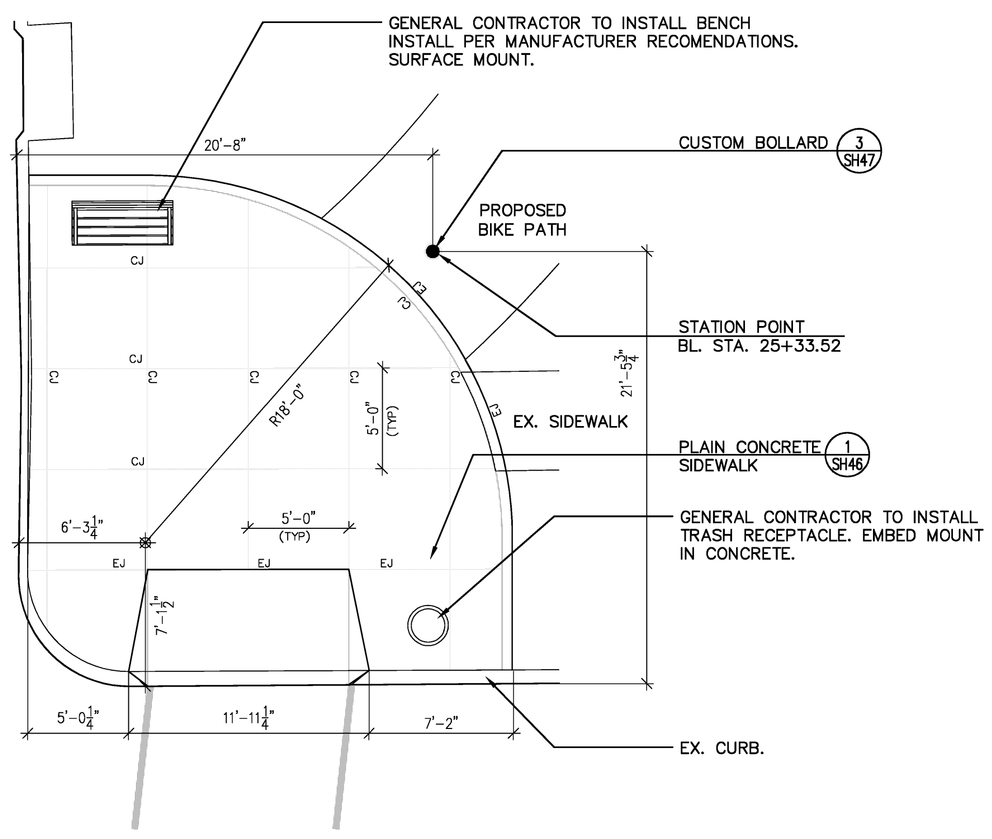

D NORHT 9TH ST. CROSSING

3/16" = 1'-0"

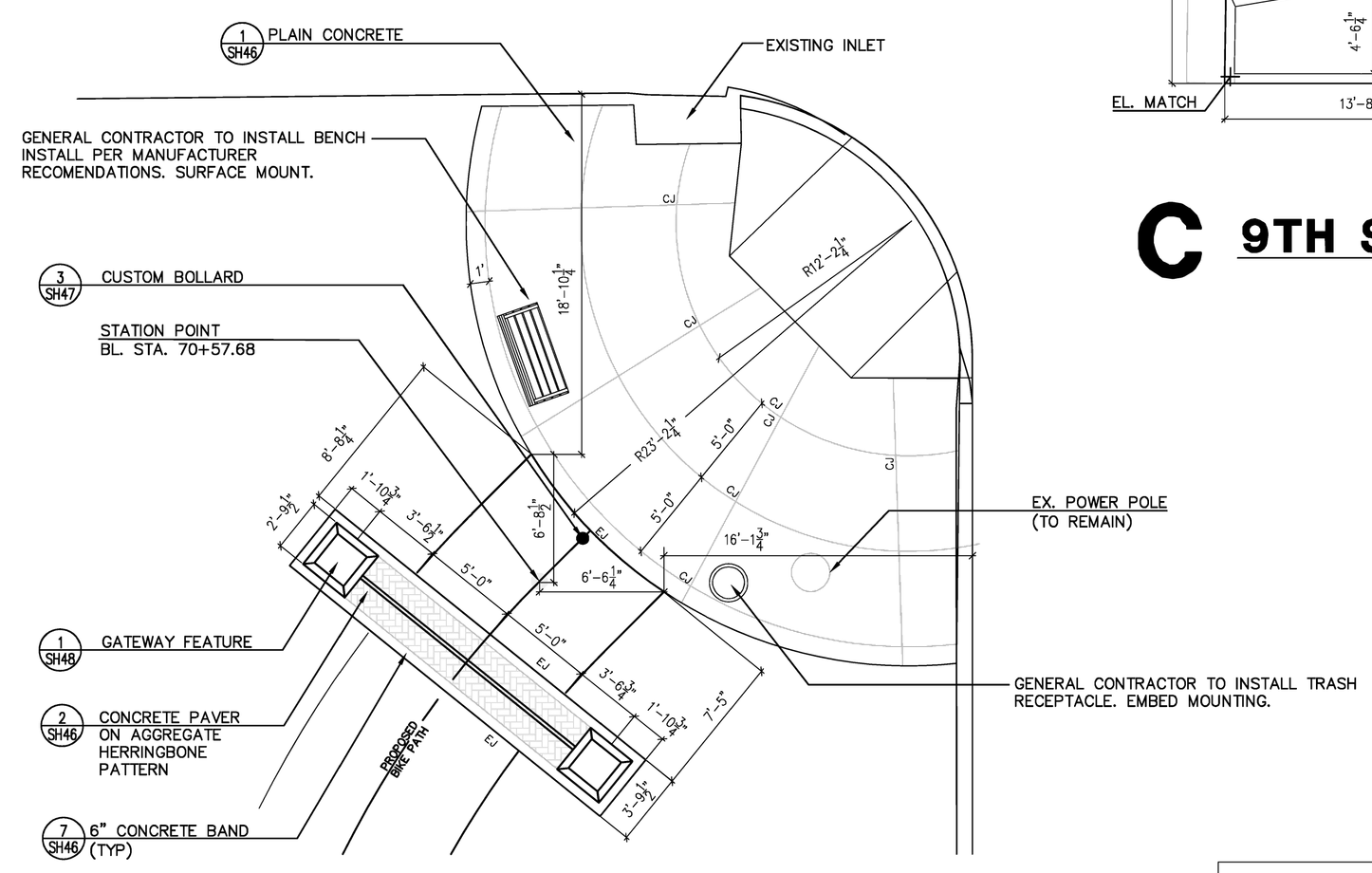

E BROADWAY GATEWAY FEATURE

3/16" = 1'-0"

LAW/KINGDON, INC.
ARCHITECTS,ENGINEERS, PLANNERS & LANDSCAPE ARCHITECTS
345 RIVERVIEW, WICHITA, KS 67203
Phone (316) 268-0230 Fax: (316) 268-0205
Copyright 2007

MIDTOWN BIKEPATH/GREENWAY
ENLARGED PLANS
WICHITA, KANSAS

Ruggles & Bohm, P.A.
Engineering, Surveying, Land Planning
924 North Main
Wichita, Kansas 67203
www.rbkansas.com
(316) 264-8008
(316) 264-4621 fax
E-mail: info@rbkansas.com

DRAWING FILE	PROJECT NUMBER	DATE
Enlarged Plans	04395	Date

DESIGN Design
DRAWN WAW
REVIEW JB
UTILITY
RB JOB 04395
SHEET 44 OF 67