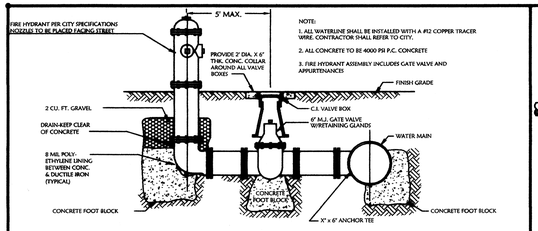

NOTE:
1. ALL WATERLINE SHALL BE INSTALLED WITH A #12 COPPER TRACER WIRE. CONTRACTOR SHALL REFER TO CITY.
2. ALL CONCRETE TO BE 4000 PSI P.C. CONCRETE
3. FIRE HYDRANT ASSEMBLY INCLUDES GATE VALVE AND APPURTENANCES

FIRE HYDRANT ASSEMBLY

N.T.S.

D156-A

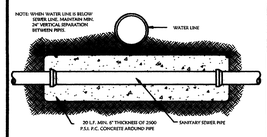

UTILITY PIPE CONCRETE ENCASEMENT

N.T.S.

D166

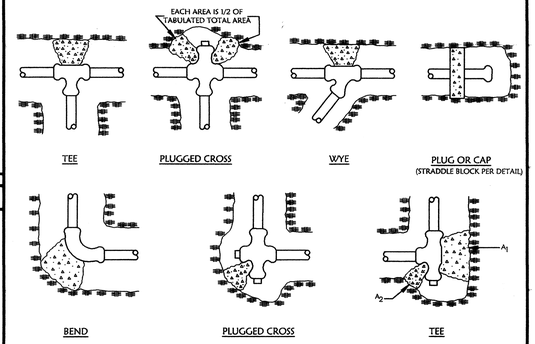

NOTES:
1. CONCRETE THRUST BLOCKING TO BE POURED AGAINST UNDISTURBED EARTH.
2. KEEP CONCRETE CLEAR OF JOINT AND ACCESSORIES.
3. IF NOT SHOWN ON PLANS, REQUIRED BEARING AREAS AT FITTING SHALL BE AS INDICATED BELOW, ADJUSTED IF NECESSARY, TO CONFORM TO THE TEST PROCEDURE (5) AND ALLOWABLE SOIL BEARING STRESS (ES) STATED THE SPECIAL SPECIFICATIONS.
4. BEARING AREAS AND SPECIAL BLOCKING DETAILS SHOWN ON PLANS TAKE PRECEDENCE OVER BEARING AREAS AND BLOCKING DETAILS SHOWN ON THIS STANDARD DETAIL.
5. BUILDING PAPER OR VISQUINE SHALL BE PLACED BETWEEN CONCRETE AND FITTINGS.
6. ALL POURED IN PLACE CONCRETE SHALL HAVE A (28) DAY STRENGTH OF 3,000 P.S.I. AND 2" TO 4" SLUMP.
7. BELOW BEARING AREAS BASED ON TEST PROCEDURE OF 150 P.S.I. AND AN ALLOWABLE SOIL BEARING STRESS OF 2,000 POUNDS PER SQUARE FOOT. TO COMPUTE BEARING AREAS FOR DIFFERENT TEST PRESSURES AND SOIL BEARING STRESSES, USE THE FOLLOWING EQUATION: BEARING AREA= (TEST PRESSURE/150) X (2,000/SOIL BEARING STRESS) X (TABLE VALUE). BEARING AREAS IN SQUARE FEET.

FITTING SIZE (IN.)	TEE, WYE, PLUG, OR CAP	90° BEND PLUGGED CROSS	TEE PLUGGED ON RUN A_1	TEE PLUGGED ON RUN A_2	45° BEND	22 1/2° BEND	11 1/4° BEND
2	1.0	1.4	1.9	1.4	1.0	-	-
4	1.0	1.4	1.9	1.4	1.0	-	-
6	2.0	3.0	4.3	3.0	1.6	1.0	-
8	3.8	5.3	7.6	5.4	2.9	1.5	1.0
10	5.9	8.4	11.8	8.4	4.6	2.4	1.2
12	8.5	12.0	17.0	12.0	6.6	3.4	1.7
14	11.5	16.3	23.0	16.3	8.9	4.6	2.3
16	15.0	21.3	30.0	21.3	11.6	6.0	3.0
18	19.0	27.0	38.0	27.0	14.6	7.6	3.8
20	23.5	33.3	47.0	33.3	18.1	9.4	4.7
24	34.0	48.0	68.0	48.0	26.2	13.6	6.8

TYPICAL THRUST BLOCKING

N.T.S.

D128-C

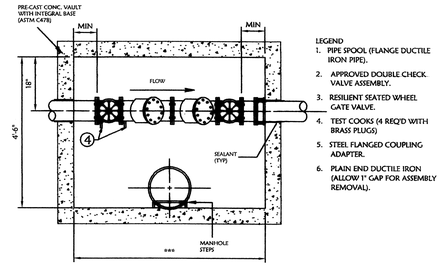

LEGEND
1. PIPE SPOOL (FLANGE DUCTILE IRON PIPE).
2. APPROVED DOUBLE CHECK. VALVE ASSEMBLY.
3. RESILIENT SEATED WHEEL GATE VALVE.
4. TEST COCKS (4 REQ'D WITH BRASS PLUGS)
5. STEEL FLANGED COUPLING ADAPTER.
6. PLAIN END DUCTILE IRON (ALLOW 1" GAP FOR ASSEMBLY REMOVAL).

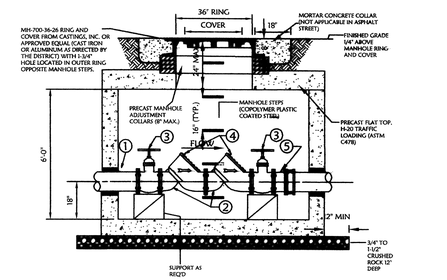

NOTES:
1. ALL BACKFLOW PREVENTATION ASSEMBLIES SHALL BE APPROVED BY THE CITY OF LIBERTY, BUILDING DEPARTMENT.
2. ALL BACKFLOW PREVENTATION ASSEMBLIES SHALL BE INSTALLED HORIZONTALLY
3. ALL FERROUS-BODIED BACKFLOW ASSEMBLIES SHALL BE FITTED WITH REPLACEABLE VALVE SEATS.

*** = 8'-0" (3', 4', & 6" WATERLINE)
*** = 10'-0" (8" & 10" WATELINE)
MIN. PER CITY SPEC.

BACKFLOW PREVENTION ASSEMBLY AND VAULT

N.T.S.

D174A

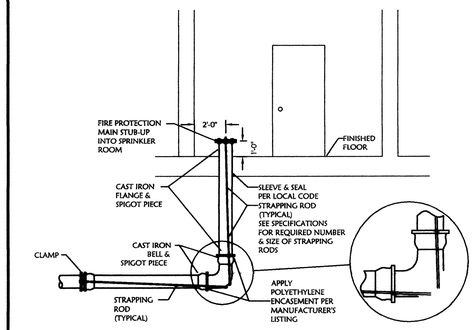

UNDERGROUND RESTRAINT DETAIL

N.T.S.

D125

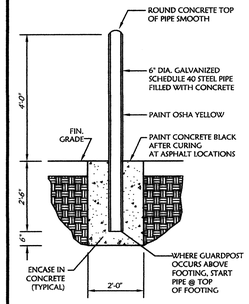

BOLLARD DETAIL

N.T.S.

D93

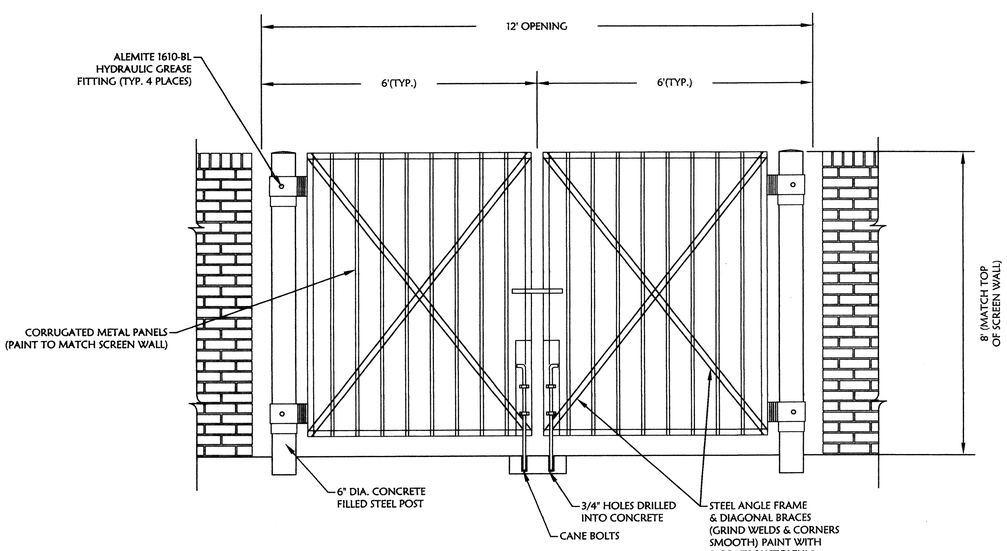

SCREEN WALL GATE DETAIL

N.T.S.

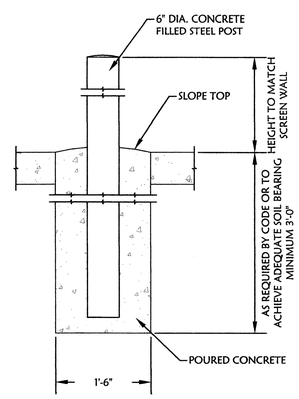

GATE POST FOOTING DETAIL

N.T.S.

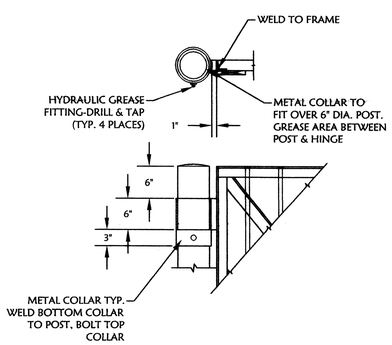

GATE HINGE DETAIL

N.T.S.

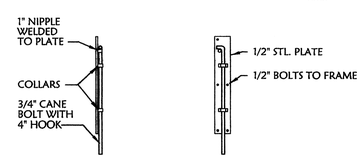

CANE BOLT DETAIL

N.T.S.

SCREEN WALL GATE ASSEMBLY

D136

REVISIONS
◇ PRE-BID SET ISSUE DATE △ POST BID SET ISSUE DATE

DATE	DESCRIPTION

Ozark Civil Engineering Inc.
Bentonville • Kansas City • Austin

LOWE'S HOME CENTERS, INC.
1905 CURTIS BRIDGE ROAD
REEC DOCK
WILKESBORO, NC 28697
336.658.4000 (V) 336.658.3257 (F)

THIS DRAWING IS THE PROPERTY OF LOWE'S HOME CENTERS, INC. ANY USE OR REPRODUCTION IN WHOLE OR PART IS PROHIBITED WITHOUT THE EXPRESSED WRITTEN CONSENT OF LOWE'S HOME CENTERS, INC. COPYRIGHT 2003 ALL RIGHTS RESERVED

LOWE'S®

DETAIL SHEET
-
LOWE'S OF N.W. WICHITA
MAIZE RD. & CENTRAL PARK ST. WICHITA, KS.
PROJECT No: 04-0460 | DRAWN BY: JG | CHECKED BY: SM

ORIGINAL ISSUE DATE:
PERMIT SET ISSUE DATE:
CONSTRUCTION SET ISSUE DATE: 8-17-07
DRAWING NUMBER:
21

04-0460-REV 3-DETAILS(FOR CITY)