STATE	PROJECT NO.	YEAR	SHEET NO.	TOTAL SHEETS
KANSAS	472-84636	2008	89	282

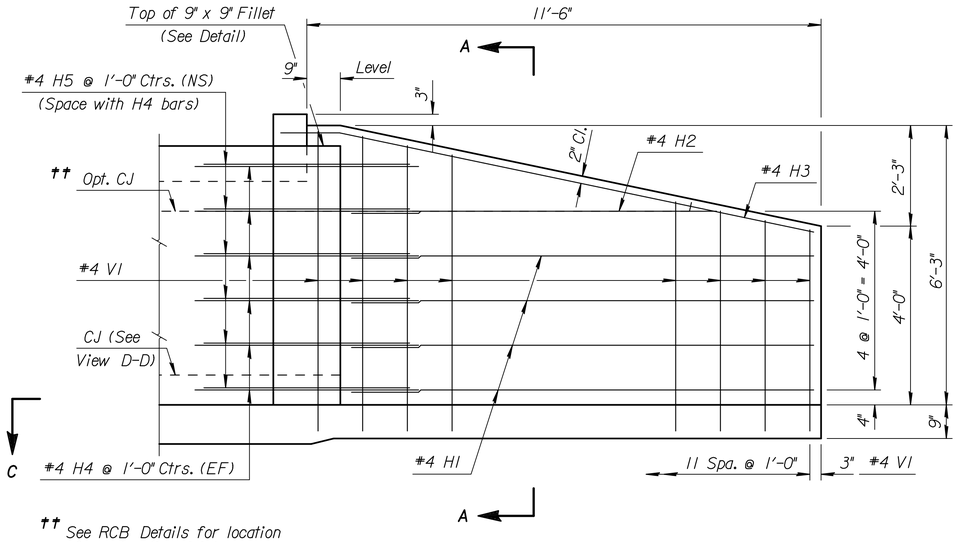

†† See RCB Details for location of construction Joint.

ELEVATION OF WINGWALL

(Backface Shown)

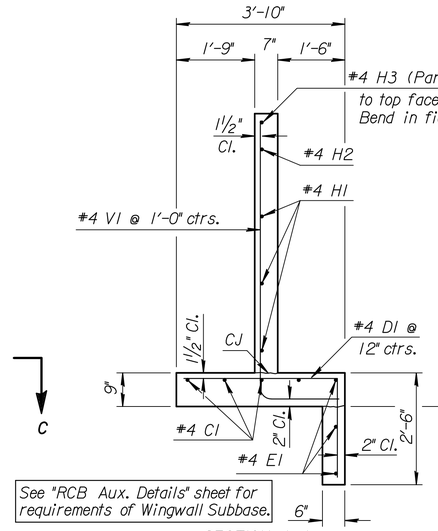

See "RCB Aux. Details" sheet for requirements of Wingwall Subbase.

SECTION A-A

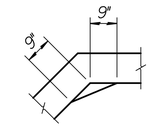

Fillet Detail

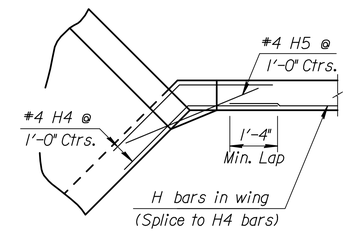

DETAIL OF 9" x 9" FILLET

(Plan View)

† NOTE: Const. Jt. may be used at Contractor's option when approved by the Engineer. D1 bars or mesh may be spliced thus: ⌐ Minimum overlap shall be 1'-3". No increase in quantities or cost shall be allowed when Contractor elects this option.

GENERAL NOTES

UNIT STRESSES: Grade 4.0 Concrete; f'c = 4,000 p.s.i.
Reinforcing Steel; fy = 60,000 p.s.i.

CONCRETE: Grade 4.0 Concrete shall be used throughout. Bevel all exposed edges with a ¾inch triangular moulding.

REINFORCING: All reinforcing shall conform to ASTM A615, Grade 60. Welded Wire Fabric shall conform to ASTM A185. All dimensions relative to reinforcing steel shall be to center-line of bar unless otherwise noted.

QUANTITIES: Wingwall Quantities include all quantities outside the neat lines of the box, excluding the hubguard.

APRON: A 5" concrete slab shall be constructed between the downstream wings in locations subject to scour only when specified on the plans or by the Engineer. Wire Reinforcing mesh shall be electrically welded and shall be composed of 6 x 6-W1.4 x W1.4 welded wire fabric and shall be classified as pounds of reinforcing.

BACKFILL MATERIAL: Soils judged as high plasticity clays, fat clays, expansive clays, or organic clays are unsuitable for backfill material for wingwalls and will not be used. Where these conditions exist, use Granular Backfill (Wingwalls).

FOUNDATION STABILIZATION: Use Foundation Stabilization on all wingwalls unless founded on rock or granular material.

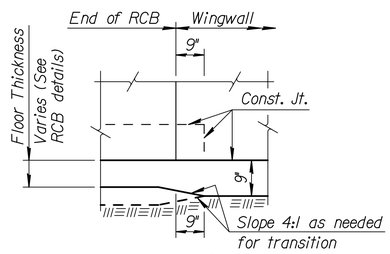

VIEW D-D

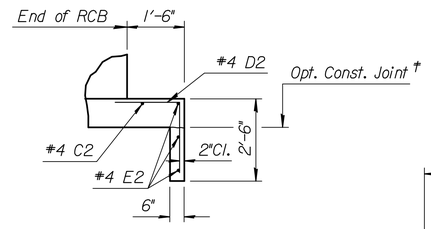

SECTION E-E

NOTE:
EF = Each Face
NS = Near Side
FS = Far Side
CJ = Const. Joint

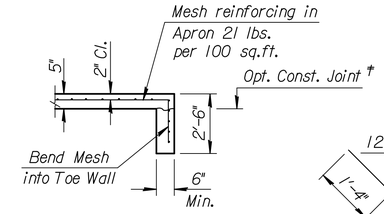

SECTION B-B

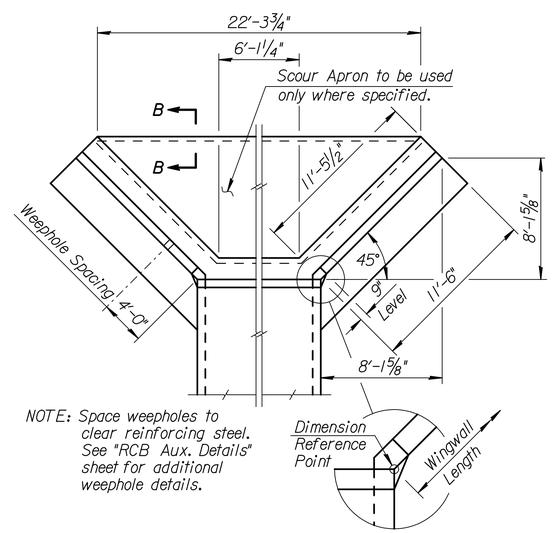

NOTE: Space weepholes to clear reinforcing steel. See "RCB Aux. Details" sheet for additional weephole details.

WING DIMENSIONS FOR NORMAL BOX

(3½:1 Embankment Slope)

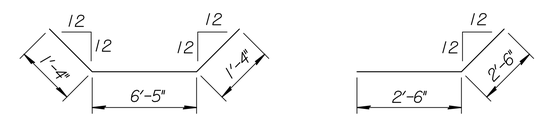

E2 H4

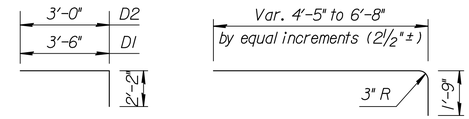

D1,D2 V1

(2 Req'd., each length)

BENDING DIAGRAM

(All dimensions are out to out of bars.)

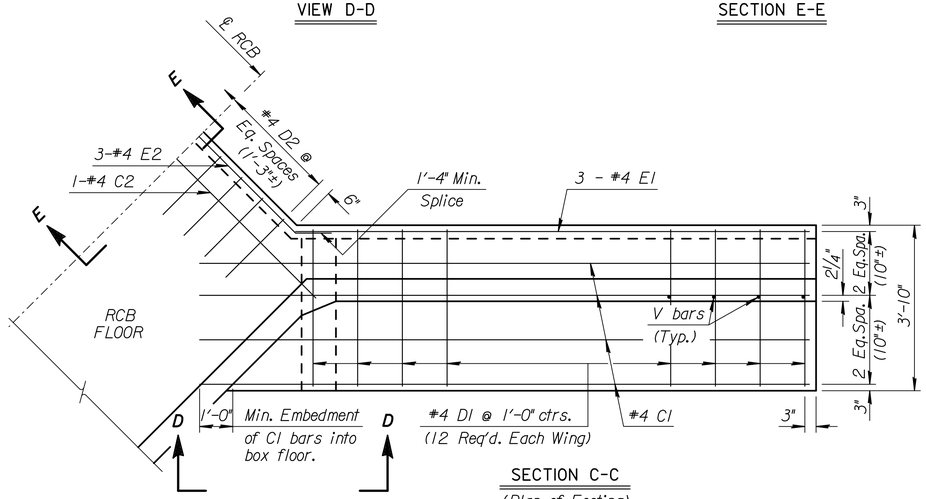

SECTION C-C

(Plan of Footing)

Quantities listed below are included in the Summary of Quantities shown on the RCB details.

WINGWALL QUANTITIES (One End Only)		
	Foundation Stabilization (C.Y.)	Concrete (Gr. 4.0) (C.Y.)
Wingwalls	2.52	6.49
Apron	0.00	0.00
Soil Saver	1.53	3.96
Reinforcing Steel		556 Lbs.
Welded Wire Fabric		-- Lbs.
Reinforcing Steel (Soil Saver)		214 Lbs.

NOTE: Reinforcing Bar List is for both wings at one end of box only.

✱ See Bending Diagram

0° Skew		#4C1	#4D1	#4E1	#4C2	#4D2	#4E2	#4V1	#4H1	#4H2	#4H3	#4H4	#4H5
	No.	8	24 ✱	6	1	5 ✱	3 ✱	24	8	2	2	24 ✱	12
	Length	14'-0"	5'-8"	11'-3"	8'-8"	5'-2"	9'-1"	✱	10'-4"	8'-4"	12'-4"	5'-0"	3'-0"

NO.	DATE	REVISIONS	BY	APP'D

KANSAS DEPARTMENT OF TRANSPORTATION

Sta. 139+62.00

FLARED WINGWALLS
5 ft Rise (0°SKEW)

BR 10.00.05 Sedgwick Co.

FHWA APPROVAL		6-5-91 APP'D	KENNETH F. HURST
DESIGNED	DETAILED	QUANTITIES	TRACED
DESIGN CK.	DETAIL CK.	QUAN.CK.	TRACE CK.

Plotted By: unlified Plot Location: $$KDOTGRPH$
File: I:\2001\01616\RCB\01616-RCB-Sta 139+62\KDOT V81.dgn
Plot Date: 8/29/2008