STATE	PROJECT NO.	YEAR	SHEET NO.	TOTAL SHEETS
KANSAS	472-84748	2008	26	52
KDOT PROJECT NO. 87 N-0429-01				

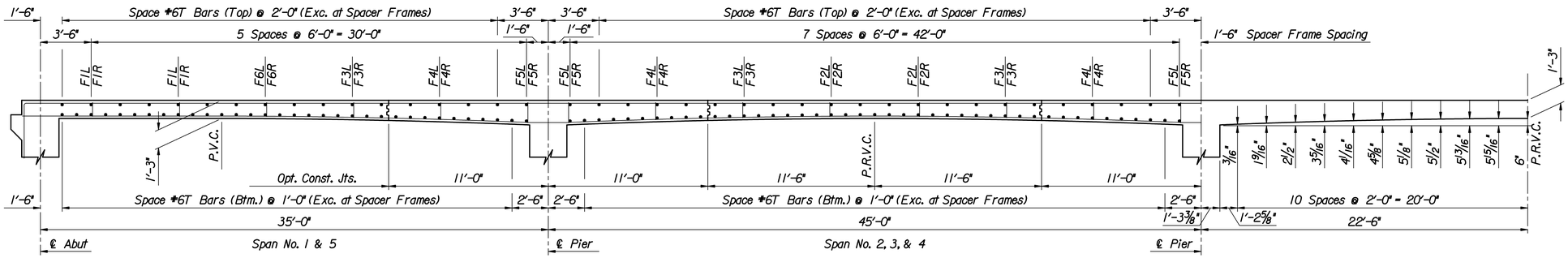

PARTIAL LONGITUDINAL SECTION

HAUNCH ORDINATES

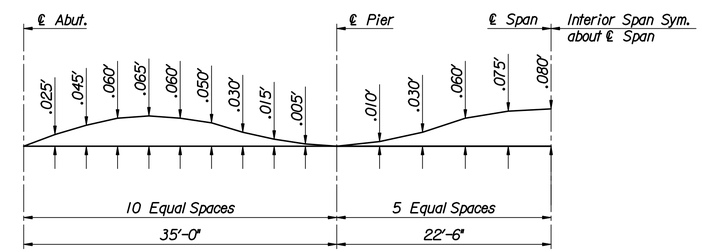

DEAD LOAD CAMBER DIAGRAM

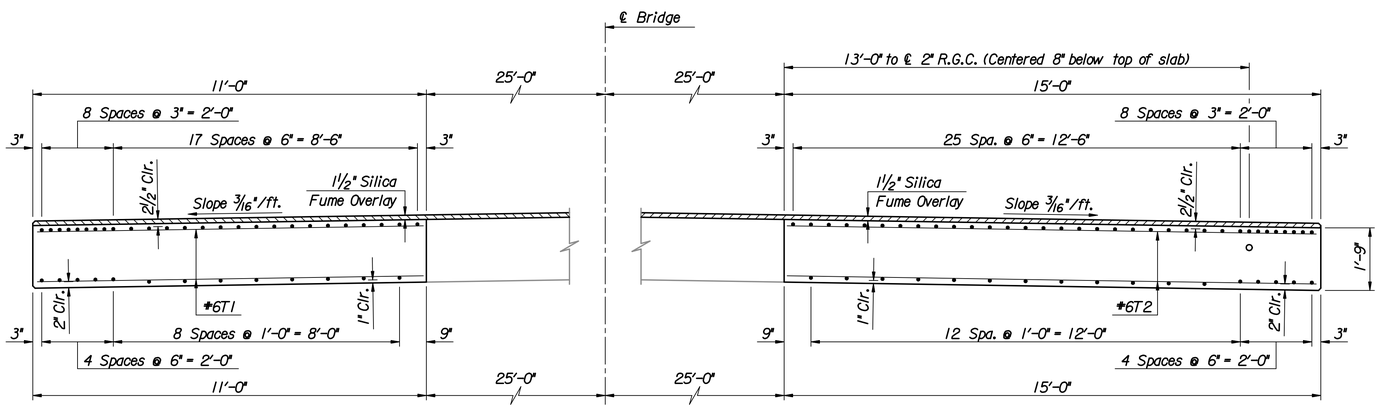

TYPICAL SECTION
Near Pier

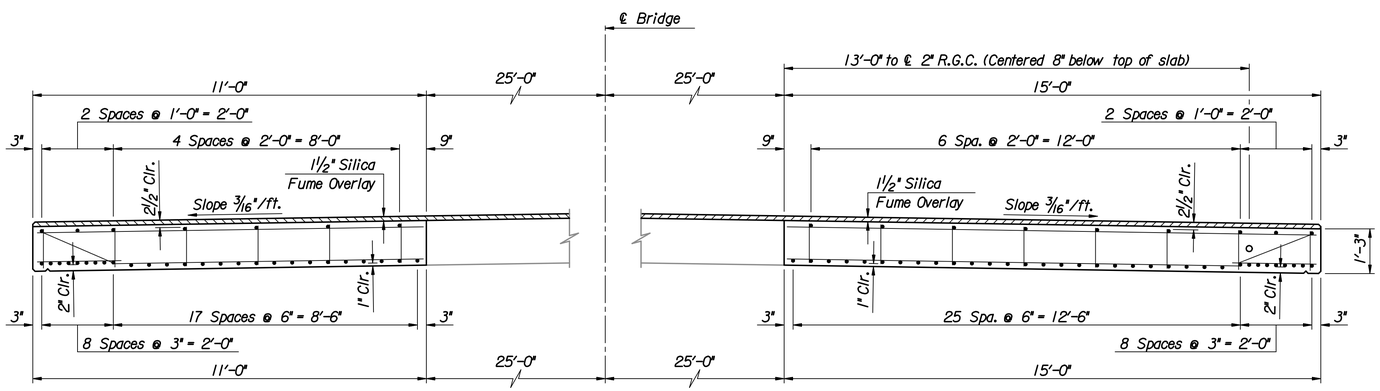

TYPICAL SECTION
Near Midspan
(Transverse reinforcing lapped to existing)

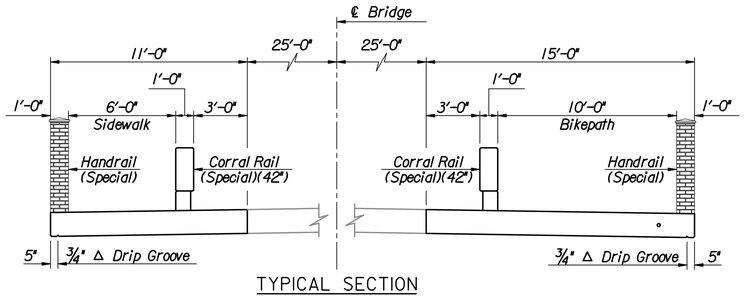

TYPICAL SECTION

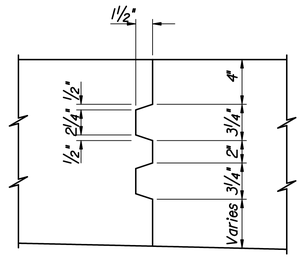

CONSTRUCTION JOINT
Optional

No.	Revisions	By	Date
1			

CITY OF WICHITA
BR. NO. 430400876500010 STA. 17+62.50

PROPOSED SUPERSTRUCTURE DETAILS
21ST STREET OVER LAR

PROJECT NO. 472-84748 SEDGWICK COUNTY

Professional Engineering Consultants, P.A.
303 S. TOPEKA • WICHITA, KANSAS 67202
316-262-2691 • FAX 316-262-3003

Designed by	M.S.N.	Checked by	R.A.S.	
Drawn by	M.S.N.	Date Feb. 2007	Job No.	06009

plotted by : msn 9-2-2008
drawn by : msn
I:/2006/06009/Final/09_02_2008/06009-000-MiscSSdet.dgn