STATE	PROJECT NO.	YEAR	SHEET NO.	TOTAL SHEETS
KANSAS	472-84610	2008	9	17

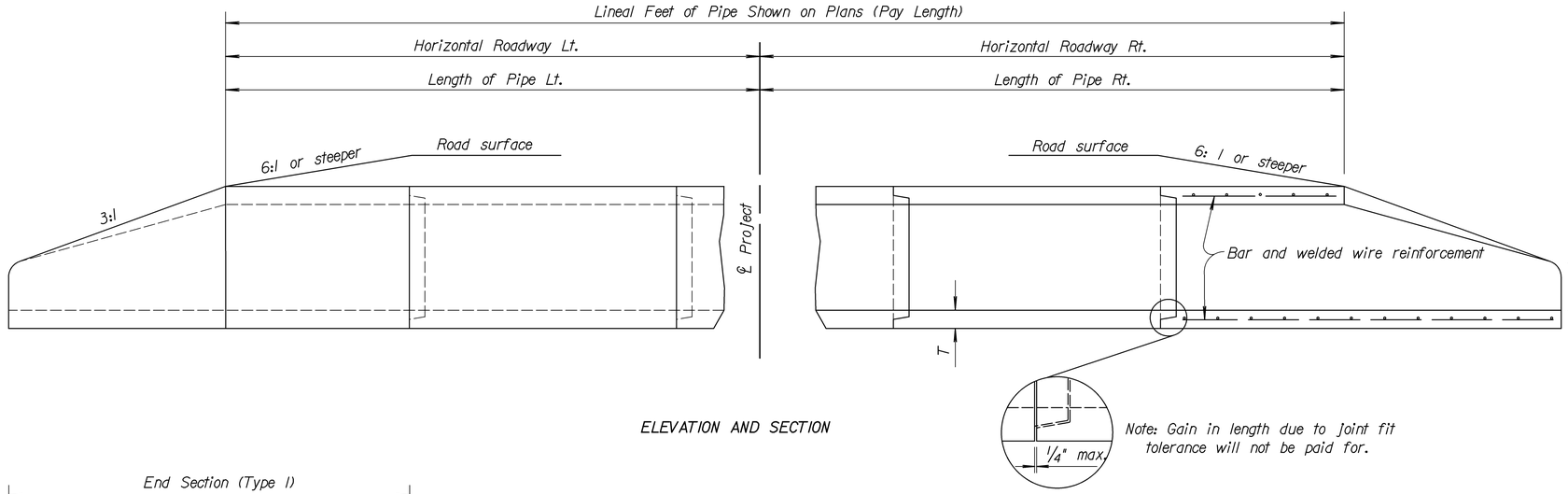

ELEVATION AND SECTION

Note: Gain in length due to joint fit tolerance will not be paid for.

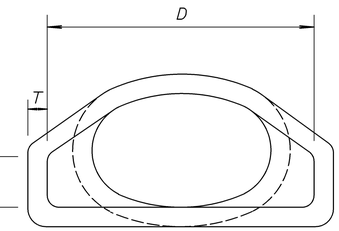

FLARED END SECTION
ELEVATION

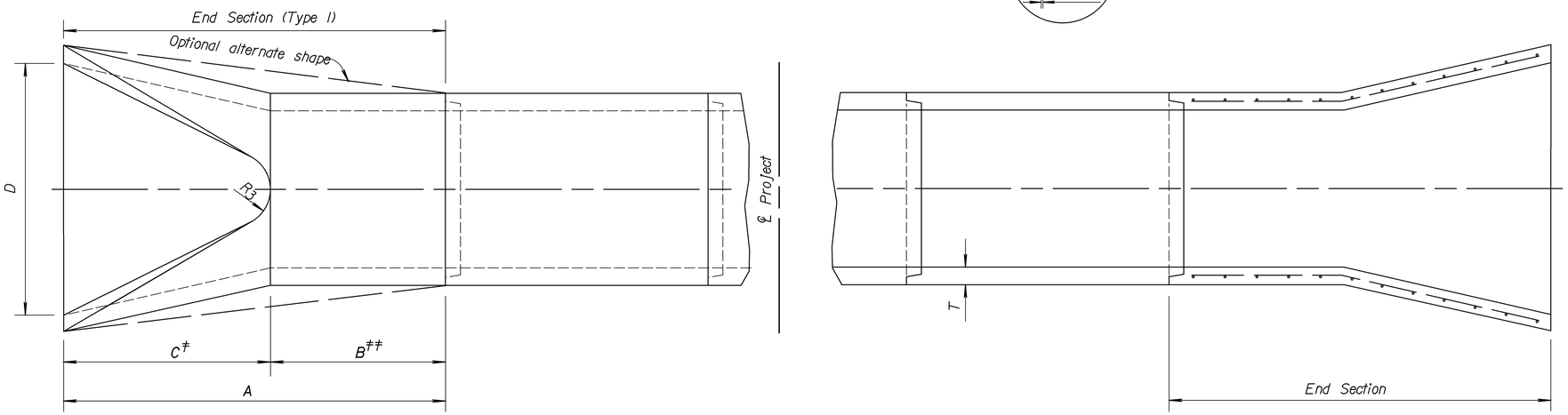

PLAN AND SECTION

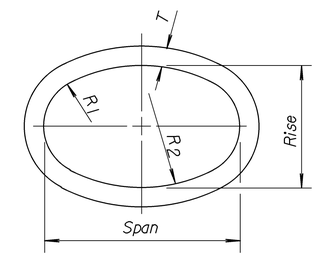

END ELEVATION

Design of end section shall conform to standard reinforced concrete horizontal elliptical pipe. Slight variations in the dimensions specified will be allowed.

END SECTION (TYPE I) NOMINAL DIMENSIONS

Bid Designation Sq. Ft.	Min. W.W. Area Sq. Ft.	Span	Rise	Overall Length A	Barrel Length B ‡‡	C ‡	D	E	R_1	R_2	R_3	T
1.0 or 1.5	1.8	23"	14"	6'-0"	3'-9"	2'-3"	3'-0"	8"	6"	20"	6"	2 3/4"
2.0,2.5 or 3.0	3.3	30"	19"	6'-0"	2'-9"	3'-3"	4'-0"	8 1/2"	8 1/4"	26 1/4"	7"	3 1/4"
4.0	4.1	34"	22"	6'-0"	2'-2"	3'-10"	4'-6"	9"	9 1/4"	29 17/32"	8"	3 1/2"
5.0	5.1	38"	24"	6'-0"	1'-6"	4'-6"	5'-0"	9 1/2"	10 1/4"	32 3/4"	9"	3 3/4"
6.0	6.3	42"	27"	6'-0"	1'-3"	4'-9"	5'-6"	10 3/8"	11 7/16"	36 3/16"	10 1/2"	3 3/4"
7.0	7.4	45"	29"	8'-0"	3'-0"	5'-0"	6'-0"	11 1/4"	12 1/4"	39 1/4"	12"	4 1/2"
8.5	8.8	49"	32"	8'-0"	3'-0"	5'-0"	6'-3"	12"	13 9/16"	42 21/32"	12 1/2"	4 3/4"
10.0	10.2	53"	34"	8'-0"	3'-0"	5'-0"	6'-6"	15 3/4"	14 3/4"	46"	13"	5"
11.0 or 12.5	12.9	60"	38"	8'-0"	3'-0"	5'-0"	7'-0"	21"	16 1/2"	51 3/4"	14"	5 1/2"
14.0 or 16.5	16.6	68"	43"	8'-0"	3'-0"	5'-0"	7'-6"	25 1/2"	18 21/32"	58 13/32"	16"	6"

‡ Paid for as separate item of "End Sections".
‡‡ Included in pay length of pipe.

Note to Designer: KDOT Pipe Policy provides guidance in identifying the prohibited and/or restricted uses of CSP, ACSP, PEP, PVCP, CAP & RCP. Provide end sections of the same type and coating as the pipe. Exceptions to this are noted in the Standard Specifications. Refer to the KDOT Design Manual, Volume I (Part C), Road Section, "Elements of Drainage & Culvert Design" for structural pipe design information which includes: corrugations, sizes, gauges, maximum/minimum fill heights and classes of pipe.

Drawn By bgarcia Plotted 7/23/2008
File J:\2008Proj\08509\DWGS\09-rd663.dgn

NO.	DATE	REVISIONS	BY	APP'D
3	4-18-08	Added ref. to KDOT Pipe Policy	S.W.K.	J.O.B.
2	4- 6-05	Revised reinforcement callout	S.W.K.	J.O.B.
1	6-16-95	Revised table & labeling	R.J.S.	J.O.B.

KANSAS DEPARTMENT OF TRANSPORTATION

CONCRETE END SECTION FOR REINFORCED CONCRETE HORIZONTAL ELLIPTICAL PIPE TYPE I

RD663

FHWA APPROVAL	6-27-08	APP'D. James O. Brewer	
DESIGNED	DETAILED	QUANTITIES	TRACED Bowser
DESIGN CK.	DETAIL CK.	QUAN.CK.	TRACE CK. King