R.E. PEDROTTI CO., INC., THE SYSTEMS INTEGRATOR (S.I.) SHALL PROVIDE NEW SIEMENS CONTROL SYSTEMS LC2000 RTU WITH I/O AS INDICATED IN THE SET OF CONTRACT DOCUMENTS AND PROVIDE ALL ADDITIONAL PROGRAMMING AT THE STORM WATER SEWER MAIN OFFICE ON McCLEAN. ADDITIONAL MONITORING SCREEN DESIGN AND CONTROL CAPABILITY AS IS CURRENLTY IN USE AT THE OFFICE. COORDINATE ALL SPECIFIC REQUIREMENTS WITH CITY OF WICHITA. THE S.I. SHALL PROVIDE A LICENSED COPY OF SEIMENS BOX SOFTWARE TO THE CITY. THIS SOFTWARE WILL BE LOADED ON A LAPTOP PROVIDED BY THE CITY. THE S.I. SHALL ALSO PROVIDE A COPY OF THE MICROCAT TERM 97 SOFTWARE FOR PROGRAMMING THE EXISTING REMOTE SITES. THE EXISTING CONTROL SYSTEM AT EACH PUMP STATION SHALL BE RE-PROGRAMMED TO DATA LOG RUN TIMES FOR EACH PUMP AND GENERATOR MONITORED AT TEH McCLEAN OFFICE. THIS DATA SHALL BE TRANSMITTED TO THE McCLEAN OFFICE AND SHALL BE LOADED INTO AVANTIS MAINTENANCE MANAGEMENT SOFTWARE TO TOTALIZE ALL RUN TIMES FOR ALL PUMPS AND GENERATORS TO AID CITY IN PERFORMING MAINTENANCE ON THE SYSTEM EQUIPMENT. THE S.I. SHALL PROVIDE A LICENSED COPY OF THE AVANTIS SOFTWARE TO THE CITY. THE S.I. SHALL BE REQUIRED TO SETUP THE AVANTIS DATABASE FOR THE PUMPS AND GENERATOR AS PUMP STATION 4 ONLY. THE S.I. SHALL PROVIDE TRAINING TO THE CITY TO ALLOW THE CITY PERSONNEL TO ENTER EQUIPMENT FROM THIER OTHER PUMP STATIONS. AS PART OF THE RE-PROGRAMMING, THE SYSTEM SHALL DISPLAY GPM PUMPED (APPROX.) BASED ON RUN TIME AND PUMP CAPACITY FOR EACH PUMP. EACH PUMP STATION WILL DISPLAY GALLONS PUMPED PER DAY, PER MONTH, AND PER YEAR FOR EACH PUMP. THEIS FLOW VOLUME WILL BA ACCESSIBLE FROM WONDERWARE TRENDS. THIS WILL ALLOW THE CITY TO DEFINE A STORM EVENT AND PULL UP FLOW DATA FOR A PARTICULAR EVENT THROUGH HISTORICAL DATA. THE RTU AT PS4 SHALL E SIEMENS LC2000 WHICH IS BACKWARDS COMPATIBLE WITH THE EXISTING MICROCAT CONTROL SYSTEM. THE RADIO SHALL BE DATARADIO VIPR WITH 12.5/6.25 CHANNEL SPACING AVAILABLE. THE RADIO SHALL ALSO HAVE AN ON BOARD ENTERNET PORT STANDARD. THE MASTER UNIT AT THE McCLEAN OFFICE SHALL BE UPGRADED TO A REDUNDANT SIEMENS CONTROL SYSTEM LC3000. THIS EQUIPMENT WILL BE INSTALLED IN THE EXISTING CABINET. THE S.I. SHALL PROVIDE A DETAILED OVERVIEW SCHEMATIC OF THE ENTIRE SCADA SYSTEM SHOWING EACH PUMP STATION, COMPUTERS, AND NETWORK EQUIPMENT, THE S.I. SHALL PROVIDE (3) EIGHT HOUR DAYS OF TRAIING TO THE CITY PERSONNEL ON THE PROGRAMMING, TROUBLE SHOOTING, AND REPAIR OF THE CONTROL SYSTEM INSTALLED. THIS TRAINING WILL TAKE PLACE AT R.E. PEDROTTI'S OFFICE IN MISSION, KANSAS. ALL TRAVEL EXPENDITURES WILL BE THE RESPONSIBILITY OF THE CITY. ADDITIONAL TRAINING SHALL BE AS SPECIFIED IN SPECIFICATION 16800. THE S.I. SHALL WORK WITH THE CITY ON SPECIFIC ITEMS TO BE COVERED BY THE TRAINING BEFORE IT IS PERFORMED. UPON COMPLETION OF THE TRAINING, THE CITY PERSONNEL SHALL BE ABLE TO PERFORM ALL PROGRAMMING AND MAINTENANCE ON THE SYSTEM WITHOUT AID FROM THE S.I.

THE SYSTEMS INTEGRATOR SHALL COORDINATE THE INSTALLATION OF THE ANTENNA WITH THE CONTRACTOR. THE EXISTING ANTENNA STRUCTURE WILL NEED TO BE REMOVED FOR INSTALLATION OF THE NEW CANOPY ABOVE THE A.T.O. THE EXISTING ANTENNA STRUCTURE MAY BE RELOCATED IF REQUIRED.

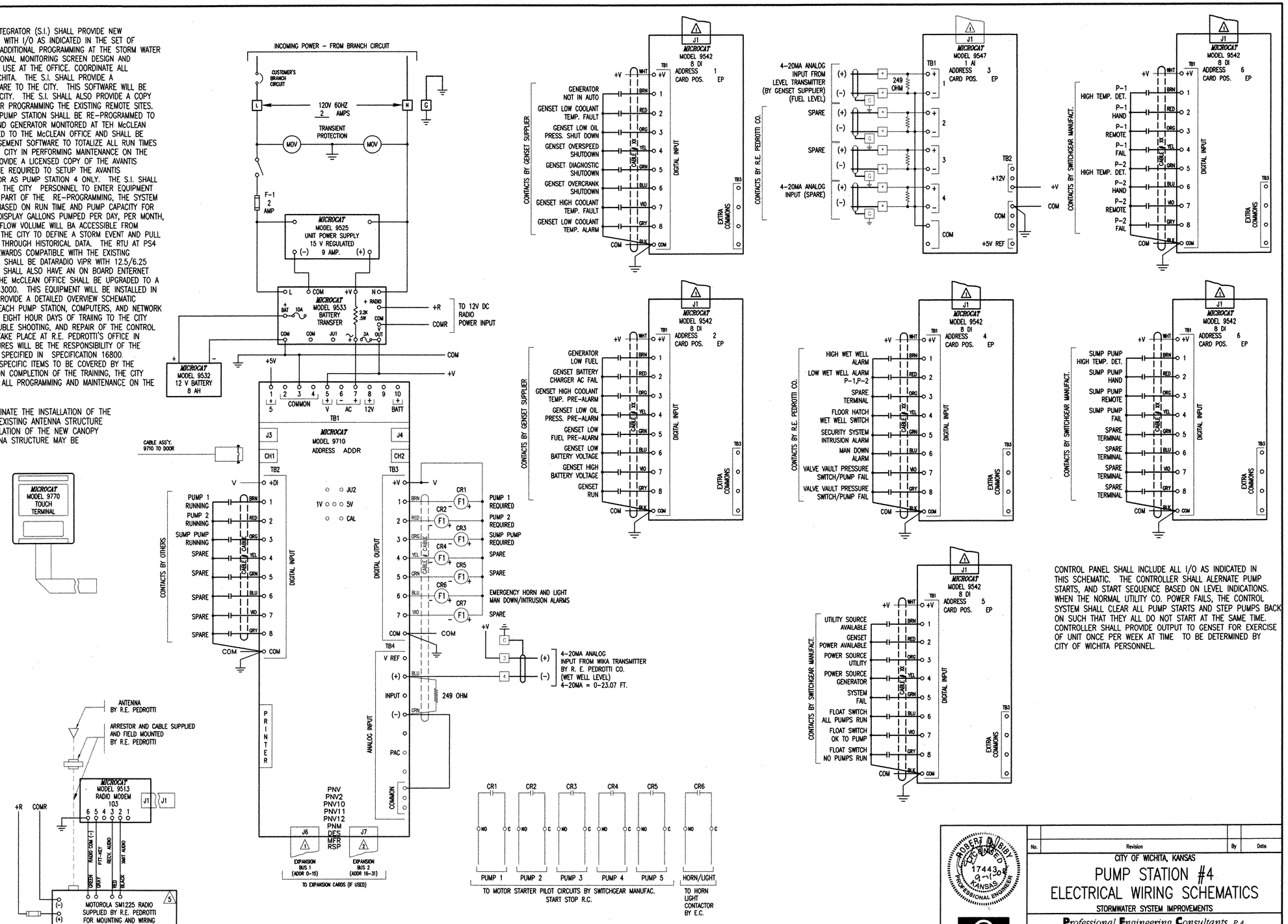

CONTROL PANEL SHALL INCLUDE ALL I/O AS INDICATED IN THIS SCHEMATIC. THE CONTROLLER SHALL ALERNATE PUMP STARTS, AND START SEQUENCE BASED ON LEVEL INDICATIONS. WHEN THE NORMAL UTILITY CO. POWER FAILS, THE CONTROL SYSTEM SHALL CLEAR ALL PUMP STARTS AND STEP PUMPS BACK ON SUCH THAT THEY ALL DO NOT START AT THE SAME TIME. CONTROLLER SHALL PROVIDE OUTPUT TO GENSET FOR EXERCISE OF UNIT ONCE PER WEEK AT TIME TO BE DETERMINED BY CITY OF WICHITA PERSONNEL.

1 CONTROL PANEL I/O SCHEMATIC
NO SCALE

No.	Revision	By	Date

CITY OF WICHITA, KANSAS

PUMP STATION #4 ELECTRICAL WIRING SCHEMATICS

STORMWATER SYSTEM IMPROVEMENTS

Professional Engineering Consultants, P.A.
303 S. TOPEKA • WICHITA, KANSAS 67202
316-262-2691 • FAX 316-262-3003

Designed by RDB, EJJ | Job No. 34-06060-042 | Sht. E2.3 of 6
Drawn by SMS | Date SEPTEMBER 2008

ROBERT D. BIBIAN LICENSED 17443 9-11-08 KANSAS PROFESSIONAL ENGINEER

Saved 09-11-2008 9:41:18 AM by RDB
Plot Scale 1:48 09-11-2008 9:46:50 AM by RDB
E:\2006\06060\DTB\06060-E23 PS4 CONTROL DIAGRAMS