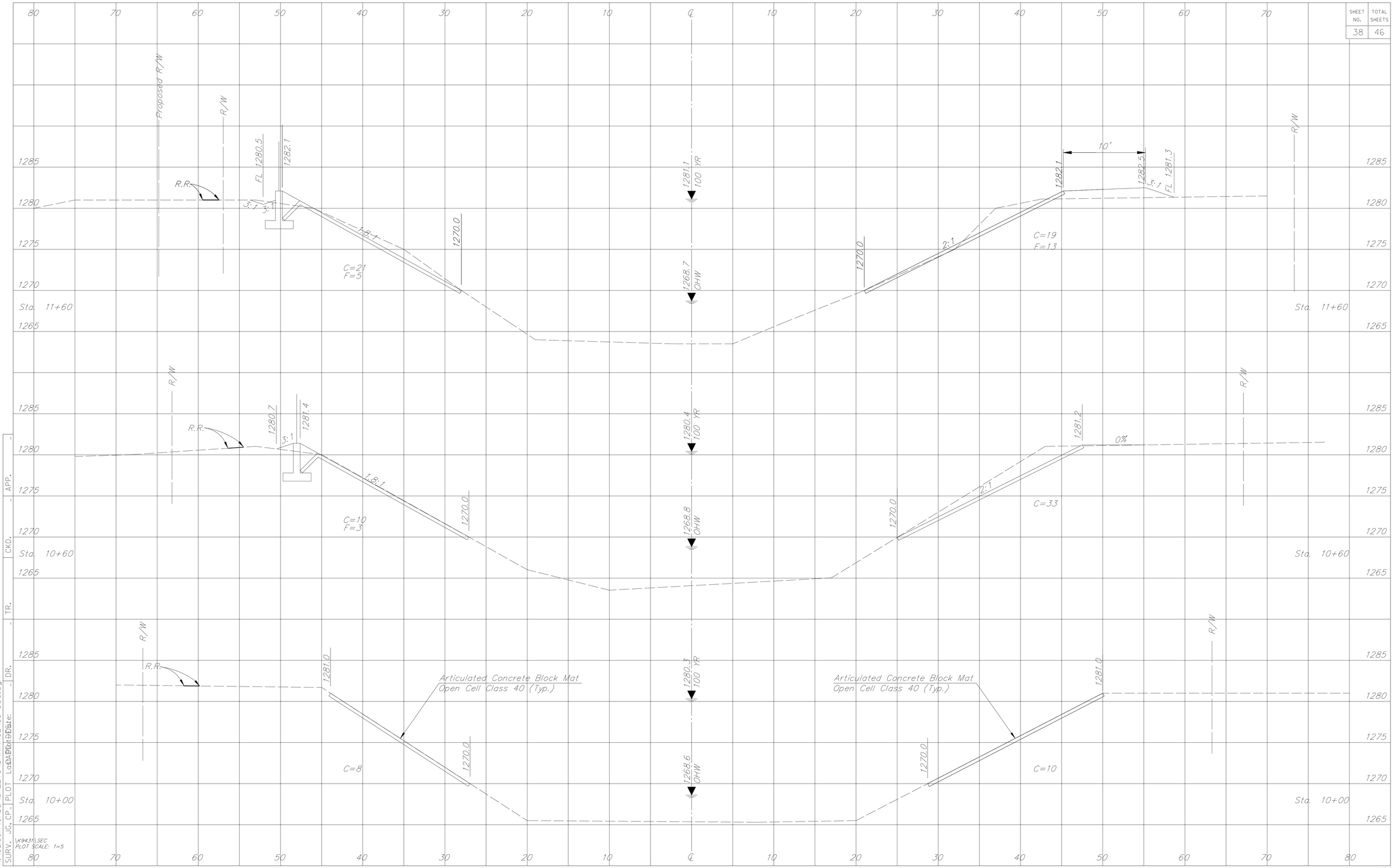

K:\32158A\CADD\SHEETS\DRAINAGE\35 Sec.dgn

SURV. - | JG, CP. | PLOT Date: | DR. - | TR. - | CKD. - | APP. -

\K9431\SEC.
PLOT SCALE: 1=5