SEWER APPURTENANCES DETAILS

ADOPTED AS STANDARD DESIGN BY CITY OF WICHITA, KS AUGUST 2007

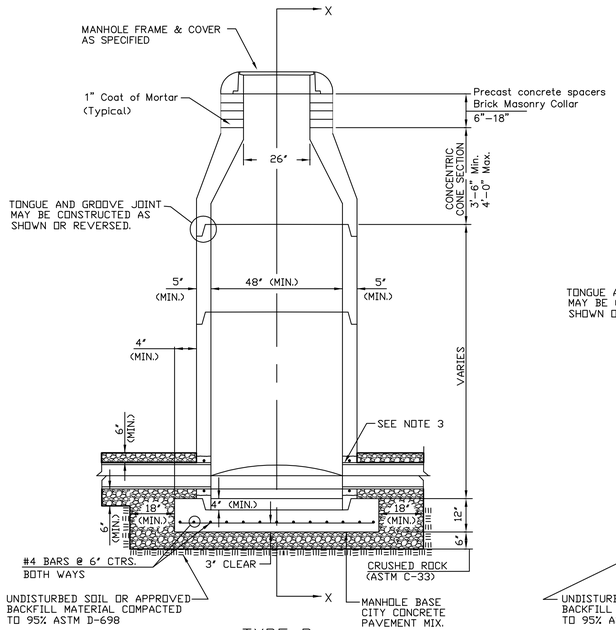

TYPE P
STANDARD MANHOLE
Not to Scale

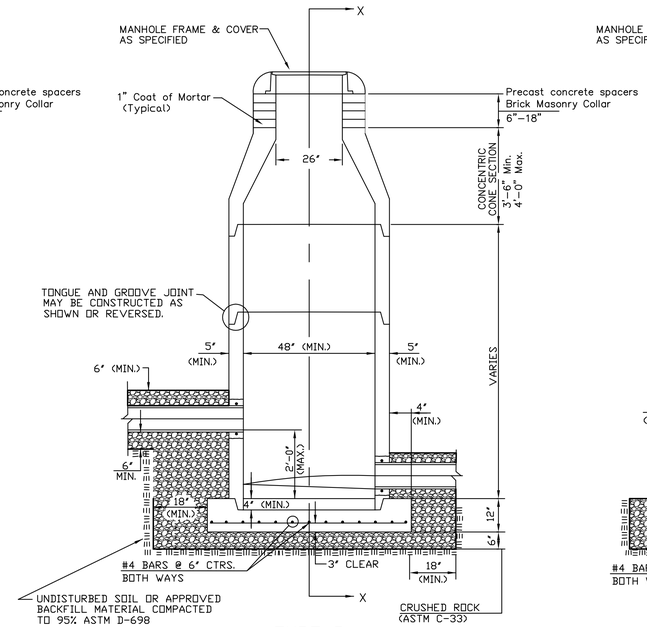

TYPE P
INSIDE DROP MANHOLE
Not to Scale

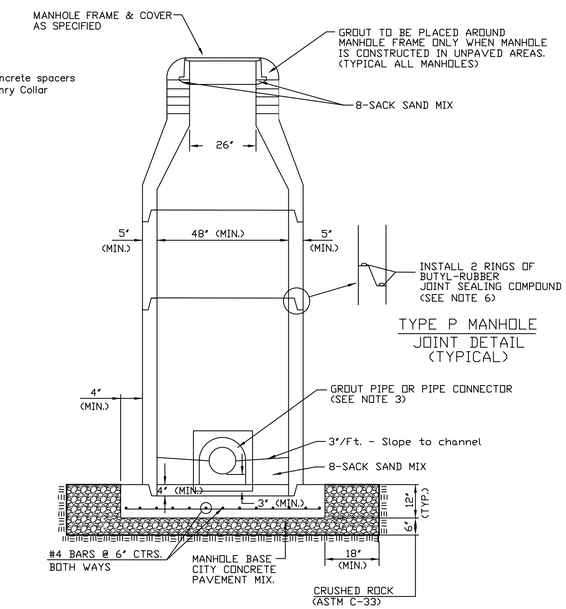

TYPE P MANHOLE
JOINT DETAIL
(TYPICAL)

SECTION X
(TYPICAL)
Not to Scale

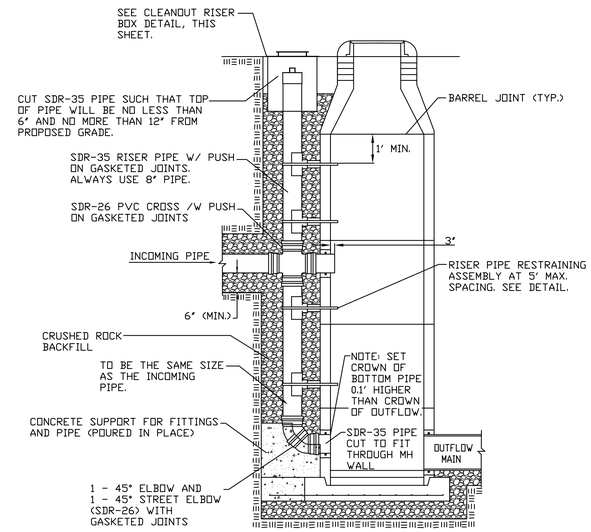

TYPE P
OUTSIDE DROP MANHOLE
Not to Scale

= CRUSHED ROCK *

= UNDISTURBED SOIL

*** CRUSHED ROCK USED FOR ENCASEMENT AND BEDDING SHALL CONFORM TO ASTM C-33, GRADATION NO. 67, AND SHALL MEET ALL REQUIREMENTS FOR PORTLAND CEMENT CONCRETE PAVEMENT COARSE AGGREGATE, SECTION 406.2, CITY OF WICHITA STANDARD SPECIFICATIONS. ALL CRUSHED ROCK FOR BEDDING AND ENCASEMENT SHALL EXTEND TO THE LIMITS OF THE MANHOLE EXCAVATION.**

PRECAST MANHOLE GENERAL NOTES

1. ALL PRECAST CONCRETE MANHOLE SECTIONS SHALL CONFORM TO THE LATEST REVISIONS OF A.S.T.M. C478 AS MODIFIED BY THE SPECIFICATIONS.
2. NON-SHRINK GROUT SHALL BE NON-METALLIC TYPE.
3. APPROVED FLEXIBLE WATERSTOP GASKETS SHALL BE INSTALLED TO JOIN THE SEWER TO THE MANHOLE WALL WHEN P.V.C. PIPE IS USED. FOR OTHER TYPES OF PIPE THE SEWER SHALL BE GROUTED IN PLACE WITH NON-SHRINK GROUT. THE SEWER PIPE SHALL BE SUPPORTED WITH CRUSHED ROCK A MINIMUM OF 3 FEET FROM THE MANHOLE WALL AND TO THE FIRST JOINT FOR V.C.P. SUCH THAT THE JOINT REMAINS FLEXIBLE.
4. ALL INSIDE SURFACES OF THE CONCRETE MANHOLE WHICH WOULD BE EXPOSED TO SEWER GAS SHALL BE COATED PER SECTION 804.4 OF STANDARD SPECIFICATIONS.
5. EXTERIOR MANHOLE WALLS SHALL BE COATED PER SECTION 804.4 OF STANDARD SPECIFICATIONS.
6. JOINT SEALING COMPOUND SHALL BE PER 804.4 OF STANDARD SPECIFICATIONS.
7. PRECAST MANHOLES SHALL BE SET AT LEAST 4 INCHES INTO THE MANHOLE BASE.
8. TOP OF MANHOLE FLOOR SLAB SHALL BE AT LEAST 3 INCHES BELOW THE FLOW LINE OF THE OUTLET PIPE TO INSURE SUFFICIENT MINIMUM THICKNESS OF SHAPED INVERT.
9. LIFTING HOLES SHALL BE FILLED WITH NON-SHRINK GROUT AND THE INTERIOR SURFACE COATED AS SPECIFIED.
10. MORTAR USED IN MASONRY CONSTRUCTION SHALL CONTAIN 8 SACKS OF CEMENT PER CUBIC YARD. CONCRETE USED IN MANHOLE BASES SHALL CONFORM TO THE REQUIREMENTS OF CONCRETE FOR CONCRETE PAVEMENT CONSTRUCTION AS SPECIFIED IN THE CITY STANDARD PAVING SPECIFICATIONS USING CITY CONCRETE PAVEMENT MIX WITHOUT AIR ENTRAINING ADMIXTURE. MORTAR SHALL BE PLACED AROUND THE MANHOLE RING AS SHOWN ON THE DRAWINGS WHEN MANHOLES ARE CONSTRUCTED IN UNPAVED AREAS. COMPLETED MANHOLE SHALL BE WITHOUT LEAKS AND WATER TIGHT.
11. REINFORCING STEEL SHALL BE INSTALLED IN THE MANHOLE BASES AND SHALL CONSIST OF NO. 4 BARS PLACED ON 6' CENTERS IN BOTH DIRECTIONS. THE MANHOLE BASE REINFORCEMENT SHALL BE PLACED AT LEAST 3' ABOVE THE BOTTOM OF THE MANHOLE BASE. ALL COSTS FOR FURNISHING AND INSTALLING REINFORCING STEEL SHALL BE INCLUDED IN THE UNIT PRICE BID FOR THE MANHOLE.
12. WALL THICKNESS SHALL BE 1' GREATER THAN MANHOLE DIAMETER IN FEET.
13. OPENINGS SHALL BE CORE DRILLED INTO THE MANHOLE WALL WHEN OUTSIDE DROPS ARE CONSTRUCTED ON EXISTING MANHOLES. SUCH OPENINGS DRILLED INTO EXISTING MANHOLES SHALL BE AS SMALL AS PRACTICAL TO FACILITATE INSTALLING AND GROUTING THE NEW PIPE IN PLACE. WATERSTOP GASKETS SHALL BE USED WITH P.V.C. PIPE. THE NEW PIPE SHALL BE GROUTED INTO THE OPENING USING AN APPROVED NONSHRINK GROUT FOR THE FULL MANHOLE WALL THICKNESS. THE EXTERIOR OF THE COMPLETED CONNECTION SHALL BE SEALED WITH AN APPROVED BITUMINOUS COATING SUCH THAT THE CONNECTION WILL BE WATER TIGHT. FLOOR OF MANHOLE SHALL BE MODIFIED TO FORM NEW FLOW CHANNEL FOR THE NEW CONNECTION AS INDICATED BY THE DRAWING. THIS WORK, INCLUDING MODIFICATION OF MANHOLE FLOOR, SHALL BE PAID FOR AT THE UNIT PRICE BID FOR OUTSIDE DROP STACK CONSTRUCTED ON EXISTING MANHOLE.
14. THE FLOORS OF ALL MANHOLES SHALL BE SHAPED WITH FLOW CHANNELS SUCH THAT THE MANHOLES WILL BE SELF CLEANING AND FREE OF AREAS WHERE SOLIDS COULD BE DEPOSITED AS SEWAGE FLOWS THROUGH THE MANHOLE FROM ALL INLET PIPES TO THE OUTLET PIPE. FLOW CHANNELS SHALL BE FORMED TO MATCH THE BOTTOM HALVES OF THE INFLOWING PIPES AND THE OUTFLOWING PIPE AS SHOWN BY THE DRAWINGS EXCEPT FOR INSIDE DROP MANHOLES. FLOW CHANNELS FOR INSIDE DROP MANHOLES SHALL BE CONSTRUCTED AS INDICATED BY THE DRAWING. MANHOLE FLOORS SHALL HAVE SLOPES OF 3 INCHES PER FOOT IN THE AREAS OUTSIDE OF THE FLOW CHANNELS SLOPED TOWARD THE FLOW CHANNELS. PIPES LAID THROUGH MANHOLES SHALL HAVE THE TOP HALF REMOVED TO NEAT LINES FOR THE FULL INSIDE DIAMETER OF THE MANHOLE. MANHOLE FLOORS SHALL THEN BE SHAPED AROUND THE BOTTOM HALF OF THE PIPE WHICH FORMS THE FLOW CHANNEL.
15. MANHOLE COVER CASTINGS AND MANHOLE FRAME CASTINGS SHALL CONFORM TO THE REQUIREMENTS AS INDICATED IN THE STANDARD SPECIFICATIONS AND AS SHOWN IN THE STANDARD DETAIL DRAWING.
16. THE VERTICAL DROP IN INSIDE DROP MANHOLES SHALL NOT EXCEED 2' REGARDLESS OF PIPE SIZE. THE CROWNS OF INFLOWING PIPES SHALL NEVER BE SET LOWER THAN THE CROWN OF THE OUTFLOWING PIPE.
17. STANDARD MANHOLES AND STANDARD INSIDE DROP MANHOLES SHALL BE BID AS STANDARD MANHOLES FOR THE TYPE AND DIAMETER INDICATED. OUTSIDE DROP MANHOLES SHALL BE BID AS STANDARD OUTSIDE DROP MANHOLES FOR THE TYPE AND DIAMETER INDICATED. ALL MANHOLE DIAMETERS WILL BE 4' UNLESS INDICATED OTHERWISE.
18. A BRICK MASONRY COLLAR SHALL BE INSTALLED BETWEEN THE CAST IRON FRAME AND THE CONCENTRIC CONE. THE COLLAR WILL HAVE 8" WALLS AND A VERTICAL HEIGHT OF 6" MINIMUM AND 18" MAXIMUM. A 1" COAT OF MORTAR WILL BE PLASTERED ON THE OUTSIDE OF THE COLLAR. THE USE OF PRE-CAST CONCRETE SPACERS FOR MANHOLE TOP ADJUSTMENT IS ALSO ALLOWED.
19. THE FULL DIAMETER OF THE MANHOLE SHALL EXTEND THE ENTIRE DEPTH OF THE MANHOLE TO THE CONE SECTION. NO REDUCTION IN MANHOLE DIAMETER WILL BE ALLOWED.
20. REFER TO PLANS FOR SIZE OF OUTSIDE DROP RISER, SADDLES AND CROSS.
21. FRAMES AND CHIMNEYS OF ALL MANHOLES CONSTRUCTED IN A FLOODWAY OR UNDER A PAVED SURFACE SHALL BE SEALED WITH AN EXTERNAL CHIMNEY SEAL, AS MANUFACTURED BY CRETEX SPECIALTY PRODUCTS, OR PRE-APPROVED EQUAL. THE CHIMNEY SEAL SHALL BE INSTALLED IN ACCORDANCE WITH MANUFACTURER'S INSTRUCTIONS AND CONSIST OF A FLEXIBLE EXTERNAL RUBBER SLEEVE, INTERLOCKING EXTENSIONS AND STAINLESS STEEL COMPRESSION BANDS, DESIGNED TO REMAIN FLEXIBLE THROUGHOUT A 25 YEAR LIFE, ALLOWING REPEATED VERTICAL MOVEMENT OF THE FRAME OF NOT LESS THAN 2 INCHES AND/OR REPEATED HORIZONTAL MOVEMENT OF NOT LESS THAN 1/2 INCH, WITH A SLEEVE PORTION THAT IS CORRUGATED WITH A MINIMUM UNEXPANDED VERTICAL HEIGHT OF EITHER 6 INCHES OR 9 INCHES AND CAPABLE OF BEING MECHANICALLY LOCKED TO THE MANHOLE FRAME, WITH A MINIMUM THICKNESS OF 3/16 INCHES MADE FROM A HIGH QUALITY RUBBER COMPOUND CONFORMING TO THE APPLICABLE REQUIREMENTS OF ASTM C-923, WITH A MINIMUM OF 1500 PSI TENSILE STRENGTH, A MAXIMUM 18% COMPRESSION SET AND A HARDNESS (DUROMETER) OF 48+5, WITH BANDS INTEGRALLY FORMED FROM 16 GAUGE STAINLESS STEEL CONFORMING TO ASTM A-240, TYPE 304, WITH NO WELDED ATTACHMENTS AND WITH A MINIMUM ADJUSTMENT RANGE OF 2 DIAMETER INCHES, USING SCREWS, BOLTS AND NUTS OF STAINLESS STEEL CONFORMING TO ASTM F-593 AND 594, TYPE 304.
22. ALL MANHOLE SECTION JOINTS THAT WILL BE IN GROUNDWATER SHALL BE WRAPPED WITH AN EXTERNAL JOINT SEAL, CRETEXWRAP EXTERNAL JOINT SEAL, OR PRE-APPROVED EQUAL. EXTERNAL JOINT SEAL SHALL BE INSTALLED IN ACCORDANCE WITH THE MANUFACTURER'S INSTRUCTIONS, AND SHALL MEET OR EXCEED THE REQUIREMENTS OF ASTM C-877 TYPE II, AND HAVE PASSED THE ASTM C-1244 TEST. EXTERNAL JOINT SEAL SHALL CONSIST OF A COLLAR 9" TO 18" WIDE WITH AN OUTER LAYER OF POLYETHYLENE WITH A MINIMUM TENSILE STRENGTH OF 4,000 PSI AND A MINIMUM TEAR RESISTANCE OF 1500 PSI, AND AN UNDER LAYER OF RUBBERIZED MASTIC REINFORCED WITH WOVEN POLYPROPYLENE FABRIC, WITH TWO 5/8" STEEL STRAPS LOCATED WITHIN THE COLLAR 3/4" FROM EACH EDGE AND CONFINED IN TUBES THAT ISOLATE THEM FROM THE MASTIC AND ALLOW THEM TO SLIP FREELY WHEN MECHANICALLY TIGHTENED AND LOCKED AROUND THE MANHOLE JOINT, AND FURNISHED WITH A MINIMUM OF 6" OVERLAP AND A CLOSING FLAP TO COVER ANY REMAINING EXPOSED STRAP.

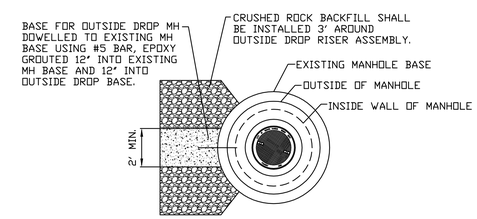

MH BASE DETAIL
Not to Scale

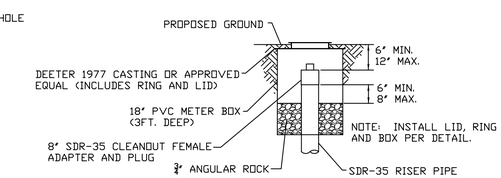

CLEAN-OUT RISER BOX DETAIL
Not to Scale

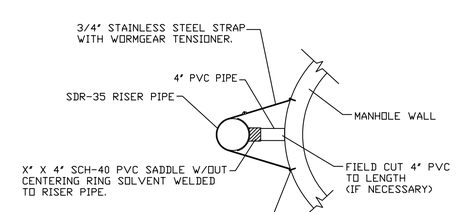

SUPPORT/SPACER DETAIL
Not to Scale

CITY OF WICHITA
PUBLIC WORKS
ENGINEERING

STANDARD TYPE 'P' MANHOLES

CITY ENGINEER
JAMES L. ARMOUR, P.E., L.S.

PROJECT NUMBER	OCA NUMBER	DATE
448-90417	633796	08/07

CITY ENGINEER'S OFFICE
CITY HALL – SEVENTH FLOOR
455 NORTH MAIN STREET
WICHITA, KANSAS 67202-1620
(316) 268-4501
(316) 268-4114 FAX

DESIGN	DRAWN
City	City

SHEET
27 OF 38

Saved 02-03-2009 3:27:24 PM by JAN
Plotted 02-03-2009 3:27:26 PM by JAN
Q:\2007\07704\000\PHASE 2A\07704-000-C-Std MH Details