NOTE: Point A must be higher than Point B so that water flows over the silt fence fabric and not around it.

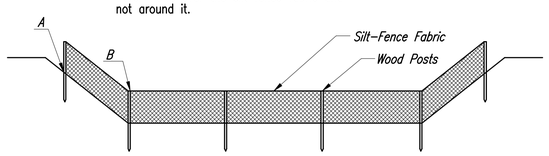

ELEVATION

SILT FENCE DITCH CHECKS
(STREAM PROTECTION)

Material Specification:

Silt fence fabric should conform to the AASHTO M288 96 silt fence specification.
The posts used to support the silt fence fabric should be a hardwood material with the following minimum dimensions: 2" square (nominal) by 4' long.
Silt fence fabric should be attached to the wooden posts with staples, wire, zip ties, or nails.

Placement:

Place silt fence in ditches where it is unlikely that it will be overtopped.
Water should flow through a silt fence ditch check, not over it. Silt fence ditch checks often fail when overtopped.
Silt fence ditch checks should be placed perpendicular to the flowline of the ditch.
The silt fence should extend far enough so that the ground level at the ends of the fence is higher than the top of the low point of the fence. This prevents water from flowing around the check.
Silt fence ditch checks should not be placed in ditches where high flows are expected. Rock checks should be used instead.
Silt fence should be placed in ditches with slopes of 6% or less. For slopes steeper than 6%, rock checks should be used.

The following table provides check spacing for a given ditch grade:

Ditch Check Ditch grade (%)	Spacing Check Spacing (feet)
0.5	200
1.0	200
2.0	100
3.0	65
4.0	50
5.0	40
6.0	30

Proper installation method:

Excavate a trench perpendicular to the ditch flowline that is at least 12" deep by 6" wide.
Extend the trench in a straight line along the entire length of the proposed ditch check.
Place the soil on the upstream side of the trench for later use.
Roll out a continuous length of silt fence fabric on the downstream side of the trench.
Place the edge of the fabric in the trench starting at the top upstream edge of the trench.
Line two sides of the trench with the fabric as shown on detail. Backfill over the fabric in the trench with the excavated soil and compact. After filling the trench, approximately 24" to 36" of silt fence fabric should remain exposed.
Lay the exposed silt fence on the upstream side of the trench to clear an area for driving in the posts. Just downstream of the trench, drive posts into the ground to a depth of at least 24". Place posts no more than 4' apart.
Attach the silt fence to the anchored post with staples, wire, zip ties, or nails.

List of common placement/installation mistakes to avoid:

Water should flow through a silt fence ditch check-not over it. Place silt fence in ditches where it is unlikely that it will be overtopped. Silt fence installations quickly deteriorate when water overtops them.
Do not place silt fence posts on the upstream side of the silt fence fabric. In this configuration, the force of the water is not restricted by the posts, but only by the staples (wire, zip ties, nails, etc.). The silt fence will rip and fail.
Do not place a silt fence ditch check directly in front of a culvert outlet. It will not stand up to the concentrated flow.
Do not place silt fence ditch checks in ditches that will likely experience high flows. They will not stand up to concentrated flow.
Follow prescribed ditch check spacing guidelines. If spacing guidelines are exceeded, erosion will occur between the ditch checks.
Do not allow water to flow around the ditch check. Make sure that the ditch check is long enough so that the ground level at the ends of the fence is higher than the low point on the top of the fence.
Do not place silt fence ditch checks in channels with shallow soils underlain by rock. If the check is not anchored sufficiently, it will wash out.

Inspection and Maintenance:

Silt fence ditch checks should be inspected every 7 days and within 24 hours of a rainfall of 1/2" or more. The following is a list of questions that should be addressed during each inspection:

Does water flow around the ditch check?
Does water flow under the ditch check?
Does the silt fence sag excessively?
Has the silt fence torn or become detached from the posts?
Does sediment need to be removed from behind the ditch check?

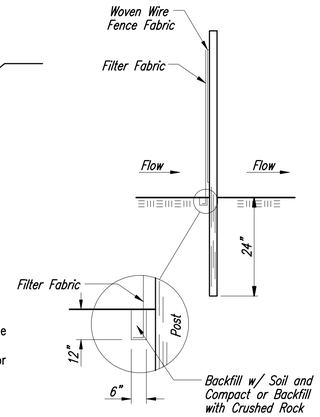

ANCHOR TRENCH DETAIL

NOTE: Point A must be higher than Point B so that water flows over the bales and not around them.

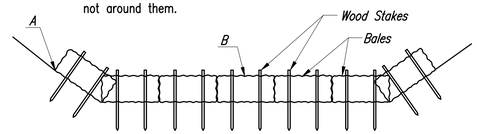

STRAW BALE DITCH CHECKS

Material Specification:

Bale ditch checks may be constructed of wheat straw, oat straw, prairie hay, or bromegrass hay that is free of weeds declared noxious by the Kansas State Board of Agriculture.
The stakes used to anchor the bales should be a hardwood material with the following minimum dimensions: 2" square (nominal) by 4' long.
Optional: The downstream scour apron should be constructed of a double-netted straw erosion-control blanket at least 6' wide.
Optional: The metal landscape staples used to anchor the erosion-control blanket should be at least 8" long.

Placement:

Bale ditch checks should be placed perpendicular to the flowline of the ditch.
The ditch check should extend far enough so that the ground level at the ends of the check is higher than the top of the lowest center bale. This prevents water from flowing around the check.
Straw bale ditch checks should not be placed in ditches where high flows are expected. Rock checks should be used instead.
Bales should be placed in ditches with slopes of 6% or less. For slopes steeper than 6%, rock checks should be used.
The following table provides check spacing for a given ditch grade:

Ditch Check Spacing

Ditch grade (%)	Check Spacing (feet)
0.5	200
1.0	200
2.0	100
3.0	65
4.0	50
5.0	40
6.0	30

Proper installation method:

Excavate a trench perpendicular to the ditch flowline that is 4" deep and a bale's width wide. Extend the trench in a straight line along the entire length of the proposed ditch check. Place the soil on the upstream side of the trench-it will be used later.
Optional: On the downstream side of the trench, roll out a length of erosion-control blanket (scour apron) equal to the length of the trench. Place the upstream edge of the erosion-control blanket along the bottom upstream edge of the trench. The erosion control blanket should be anchored in the trench with one row of 8" landscape staples placed on 18" centers. The remainder of the erosion-control blanket (the portion that is not lying in the trench) will serve as the downstream scour apron. This section of the blanket should be anchored to the ground with 8" landscape staples placed around the perimeter of the blanket on 18" centers. The remainder of the blanket should be anchored using two evenly spaced rows of 8" landscape staples on 18" centers placed perpendicular to the flowline of the ditch.
Place the bales in the trench, making sure that they are butted tightly. Two stakes should be driven through each bale along the centerline of the ditch check, approximately 6" to 8" in from the bale ends. Stakes should be driven at least 12" into the ground.
Once all the bales have been installed and anchored, place the excavated soil against the upstream side of the check and compact it. The compacted soil should be no more than 3" to 4" deep and extend upstream no more than 24".

List of common placement/installation mistakes to avoid:

Do not place a bale ditch check directly in front of a culvert outlet. It will not stand up to the concentrated flow.
Do not place bale ditch checks in ditches that will likely experience high flows. They will not stand up to concentrated flow.
Follow prescribed ditch-check spacing guidelines. If spacing guidelines are exceeded, erosion will occur between the ditch checks.
Do not allow water to flow around the ditch check. Make sure that the ditch check is long enough so that the ground level at the ends of the check is higher than the top of the lowest center bale.
Do not place bale ditch checks in channels with shallow soils underlain by rock. If the check is not anchored sufficiently, it will wash out.
Bale ditch checks must be dug into the ground. Bales at ground level do not work because they allow water to flow under the check.

Inspection and Maintenance:

Bale ditch checks should be inspected every 7 days and within 24 hours of a rainfall of 1/2" or more. The following is a list of questions that should be addressed during each inspection:

Does water flow around the ditch check?
Does water flow under the ditch check?
Does water flow through spaces between abutting bales?
Are any bales and/or scour aprons (optional) dislodged?
Are bales decomposing due to age and/or water damage?
Does sediment need to be removed from behind the ditch check?

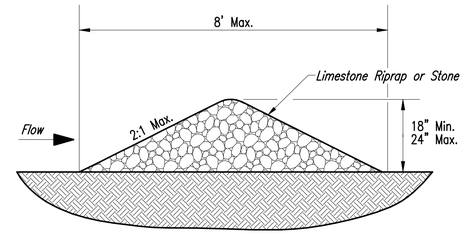

DETAIL OF ROCK DITCH CHECK INSTALLATION

Note: Point A must be higher than point B so that water flows over the rock check not around it.

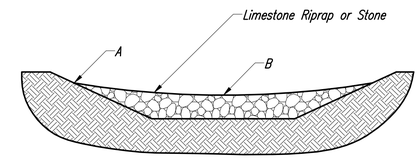

INSTALLATION OF ROCK DITCH CHECKS

ROCK DITCH CHECKS

Purpose & Design

Rock ditch checks operate by intercepting and ponding sediment-laden run-off. Ponding the water dissipates the energy of any incoming flow and allows a large portion of the suspended sediment to settle out. Water exits the ditch check by flowing over its crest. Rock ditch checks are ideal for ditches that will eventually have a riprap lining. Upon completion of the project, the rock ditch checks can be spread out to form the riprap channel lining.

Material Specification:

Stone used for rock ditch checks shall be free from soapstone, shale, shalelike, or other easily disintegrated material. Stone used may be irregular in shape and shall be approximately 6" to 9" in width, 12" in length and a minimum weight per stone of 50 lbs. Precast concrete blocks and concrete from old structures may not be used. The stone shall be placed ungrouted.

Placement:

Rock ditch checks shall be placed perpendicular to the flowline of the ditch.

Rock ditches must be designed so that water can flow over them, not around them.
The ditch checks should extend far enough so that the ground level at the ends of the check is higher than the low point on the crest of the check.

Proper installation method:

Using Limestone or Rock as listed above, construct a rock ditch check perpendicular to the ditch flowline.
The ditch check should be 18" to 24" high and have side slopes no steeper than 2:1. The rock ditch check must be constructed so that water can flow over the top and not around the ends (i.e., the ground level at the ends of the check must be higher than the low point on the crest of the check).

List of common placement/installation mistakes to avoid:

Follow prescribed ditch check spacing guidelines. If spacing guidelines are exceeded, erosion will occur between the ditch checks.

Do not allow water to flow around the ditch check. Make sure that the ditch check is long enough so that the ground level at the ends of the check is higher than the low point on the crest of the check

Inspection and Maintenance:

Rock ditch checks should be inspected every 7 days and within 24 hours of a rainfall of 0.5 inches or more. The following is a list of questions that should be addressed during each inspection.

Does the water flow around the ditch check?
This is usually caused by insufficent ditch check length. If this occurs extend the check a sufficient length so that the ground level at th ends of the check is higher than the low point on the crest of the check.

Have high-velocity flows displaced any stones from the check?
Sometimes high-velocity flows can carry away portions of a rock ditch check after a large rainstorm, inspect the rock ditch check for any displaced stones. If a large portion of a rock ditch check has washed away, fill in the void with new stone immediately.

Does sediment need to be removed from behind the ditch check?
Sediment accumulated behind the ditch check should be removed when it reaches one-half of the original exposed height of the rock ditch check. Allowing too much sediment to accumulate behind a ditch check drastically reduces its effectiveness. One high-intensity rainfall can dislodge That is why it is extremely important to inspect ditch checks within 24 hours of a large rainfall.

RECORD DRAWING
5-8-09

CITY OF WICHITA

SOIL EROSION BMPs

DITCH CHECK DETAILS

SCOTT LINDEBAK, P.E.
STORM WATER ENGINEER

PROJECT NUMBER	OCA NO.
1358-PPW	607853

DATE NOV 2007

SHEET 7 OF 15

No.	Date	By	Approved	Revision

SERENDIPITY ESTATES ADDITION WATERLINE
EROSION CONTROL BMP'S
CITY OF ANDOVER, KANSAS
JAMES M. THOMPSON, P.E. - CITY ENGINEER
C.O.W. Proj. No. 1358-PPW Index Code 607853

POE & ASSOCIATES, INC.
CONSULTING ENGINEERS
5940 E. Central, Suite 200 ■ Wichita, KS 67208-0242
Phone 316/685-4114 ■ FAX 316/685-4444

FINAL

Designed By: J. Dickman & J. Ubert
Drawn By: M. Tucker
Poe Job No.: 1906A
Date: November 2007

Sheet 7 of 15