FHWA REG NO.	STATE	PROJECT NO.	YEAR	SHEET NO	TOTAL SHEETS
7	KANSAS	87 N-0135-01	2005	50	137

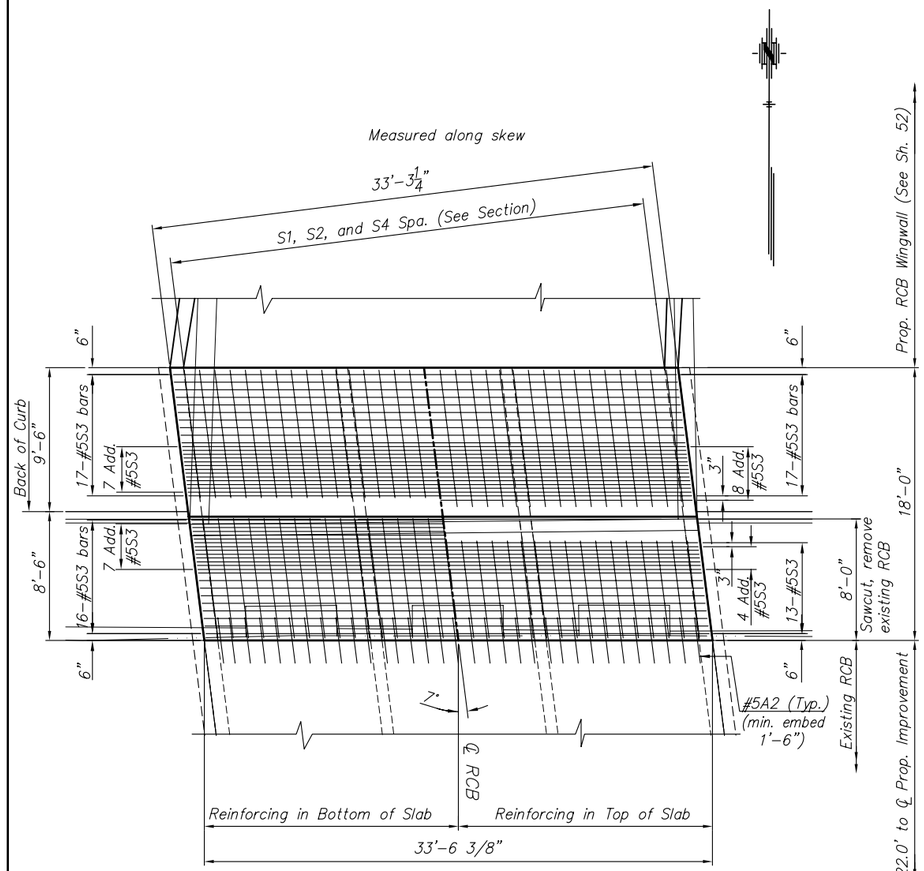

SLAB PLAN

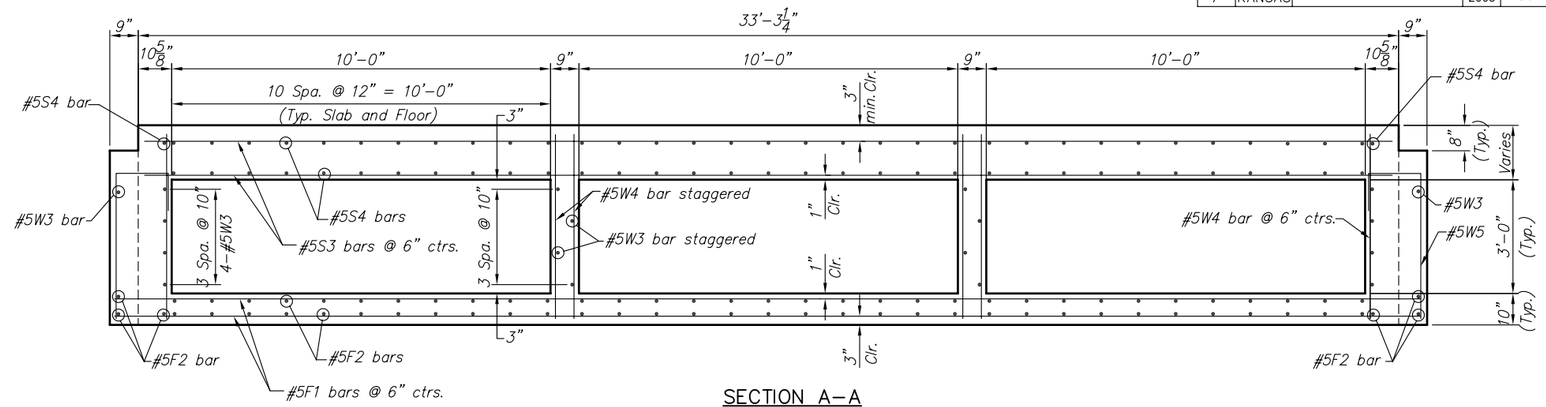

SECTION A-A

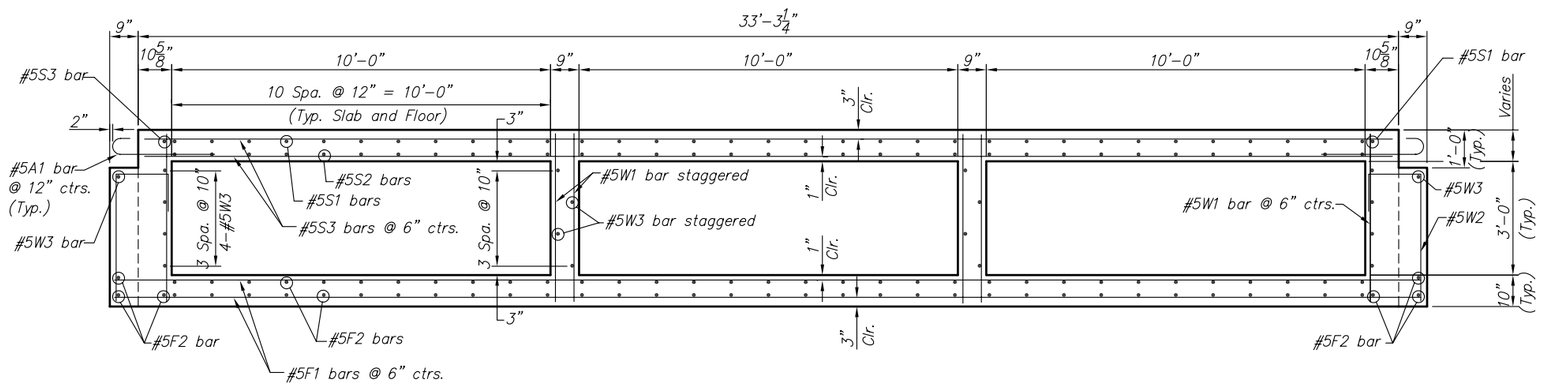

SECTION B-B

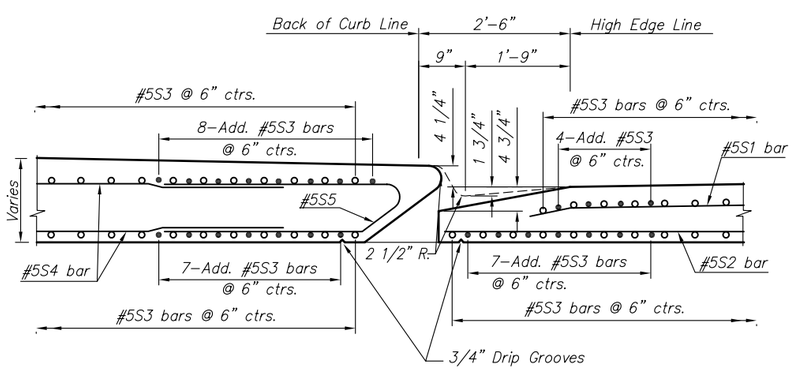

TYPICAL SECTION THRU INLET

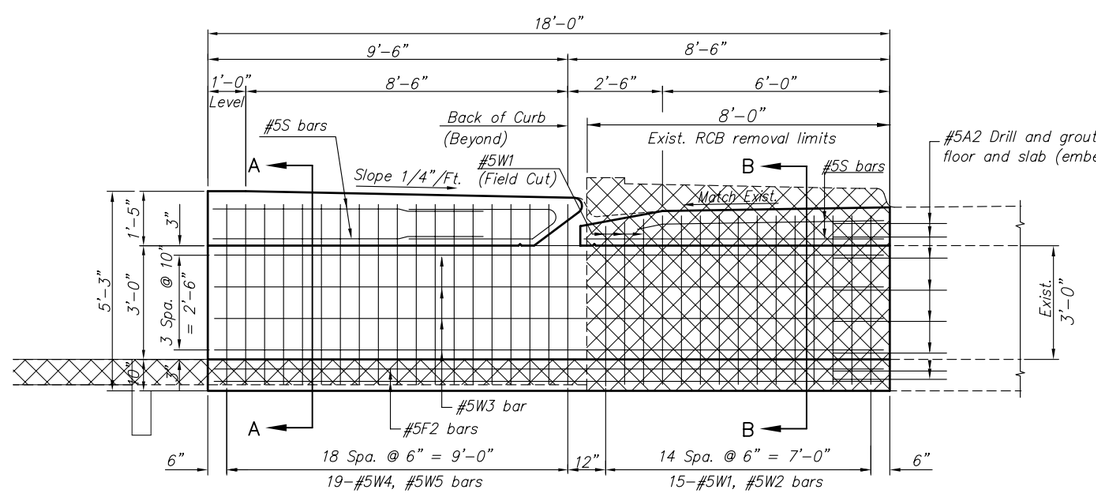

LONGITUDINAL SECTION
(Transverse bars not shown for clarity)

Sawcut and remove exist. RCB to the limits shown. Remove exist. handrail. Work is subsidiary to "Removal of Exist. Structures"

H:\CIVIL\03149\dwg\RCB\10X3RCB_NORTH.DWG 1/10/2006 4:07:51 PM CST

NO.	DATE	REVISIONS	BY	APP'D
2				
1				

KANSAS DEPARTMENT OF TRANSPORTATION

TRIPLE 10'x3' RC GRADE BOX EXTENSION
NORTH END (7° SKEW)

PROJ. NO. 87 N-0135-01 SEDGWICK CO.

MKEC ENGINEERING CONSULTANTS, INC.
WICHITA, KANSAS

DESIGNED BY:	KJS	CHECKED BY:	KJS
DRAWN BY:	DPG	DATE: DEC 05	SHEET 50 OF 137