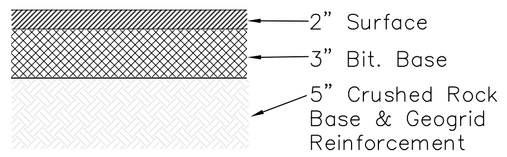

1 TYP. 5" ASPHALT PAVEMENT
NOT TO SCALE

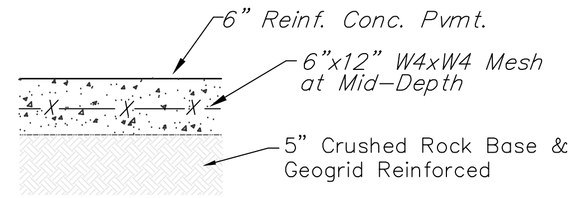

2 6" CONCRETE PAVEMENT
NOT TO SCALE

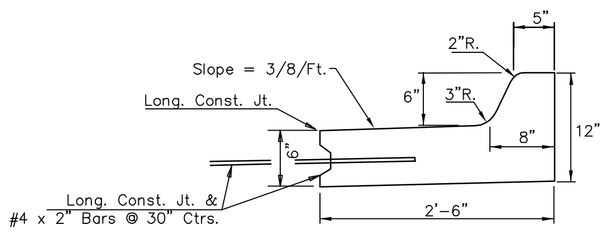

3 LOW EDGE COMB. CURB & GUTTER ADJACENT TO 6" CONC. PVMT.
NOT TO SCALE

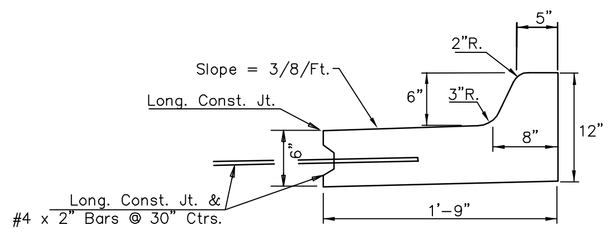

4 LOW EDGE MEDIAN CURB & GUTTER ADJACENT TO 6" CONC. PVMT.
NOT TO SCALE

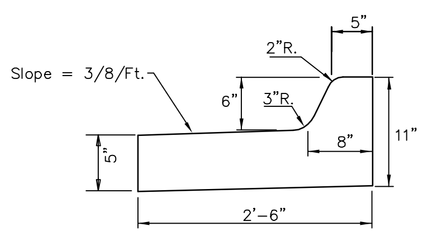

5 LOW EDGE COMB. CURB & GUTTER ADJACENT TO 5" A.C. PVMT.
NOT TO SCALE

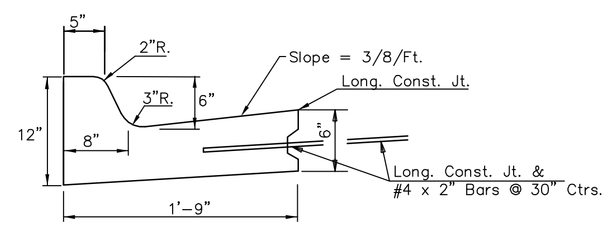

6 HIGH EDGE MEDIAN CURB & GUTTER ADJACENT TO 6" CONC. PVMT.
NOT TO SCALE

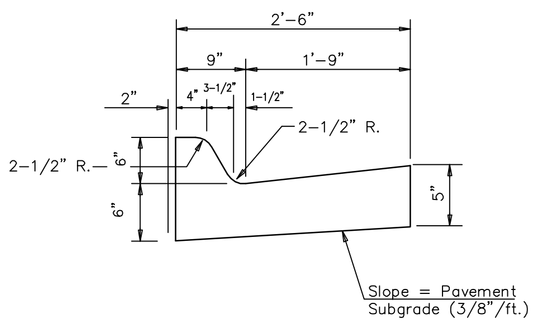

7 COMBINATION CURB & GUTTER ADJACENT TO 5" A.C. PVMT.
NOT TO SCALE

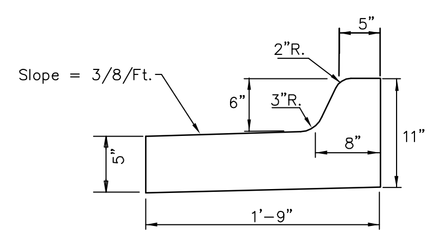

8 LOW EDGE MEDIAN CURB & GUTTER ADJACENT TO 5" A.C. PVMT.
NOT TO SCALE

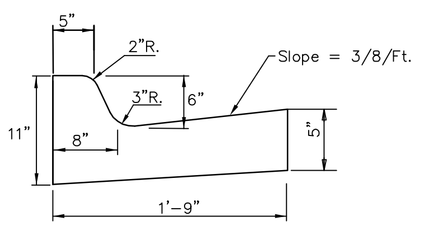

9 HIGH EDGE MEDIAN CURB & GUTTER ADJACENT TO 5" A.C. PVMT.
NOT TO SCALE

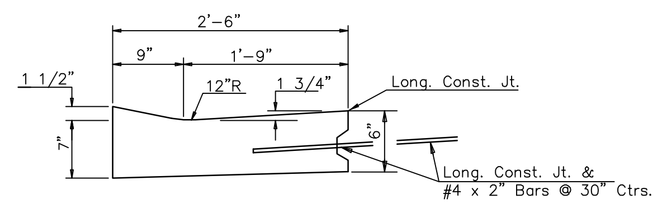

10 COMBINED CURB & GUTTER (1 1/2") ADJACENT TO 6" CONC. PVMT.
NOT TO SCALE

(TYPE A)
STANDARD WHEELCHAIR RAMP
WITH DETECTABLE WARNING
CONSTRUCTION DETAIL FOR STREETS
WITH COMBINED CURB & GUTTER

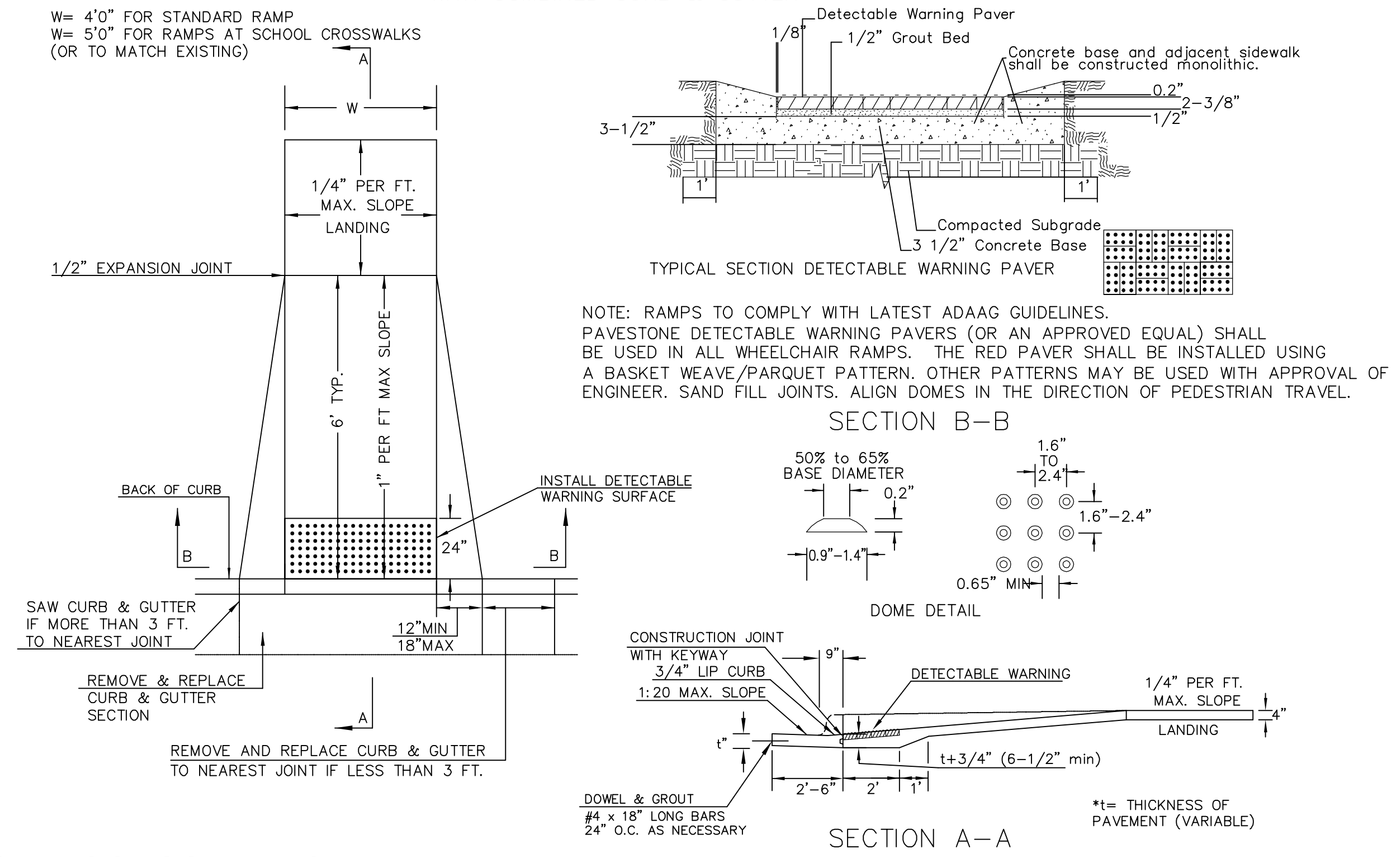

NOTE: RAMPS TO COMPLY WITH LATEST ADAAG GUIDELINES.
PAVESTONE DETECTABLE WARNING PAVERS (OR AN APPROVED EQUAL) SHALL BE USED IN ALL WHEELCHAIR RAMPS. THE RED PAVER SHALL BE INSTALLED USING A BASKET WEAVE/PARQUET PATTERN. OTHER PATTERNS MAY BE USED WITH APPROVAL OF ENGINEER. SAND FILL JOINTS. ALIGN DOMES IN THE DIRECTION OF PEDESTRIAN TRAVEL.

SECTION B-B

11 ACCESSIBLE CURB RAMP
NOT TO SCALE