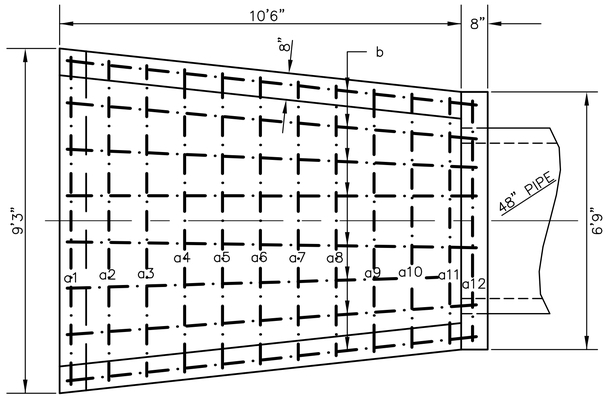

All exposed edges to have 1/2" bevel

TABLE OF QUANTITIES				
BAR	NUMBER	LENGTH	SHAPE	WEIGHT
a1	1	10'10"		7.24
a2	1	11'3"		7.52
a3	1	11'8"		7.79
a4	1	12'1"		8.07
a5	1	12'6"		8.35
a6	1	13'0"		8.68
a7	1	13'5"		8.96
a8	1	13'10"		9.24
a9	1	14'3"		9.52
a10	1	14'8"		9.80
a11	1	15'2"		10.13
a12	1	16'10"		11.24
b	8	12'7"		67.25
c	2	8'6"		11.36
d	2	11'6"		15.36
e	3	6'5"		12.91
f	2	10'9"		14.36
g	2	9'0"		12.02
h1	4	1'2"		3.12
h2	4	8"		1.78
j	4	3'3"		8.68
k	7	2'6"		11.69
Total Rebar, lbs				265.07
Concrete, C.Y.				4.75

All rebars to be #4.

PLAN

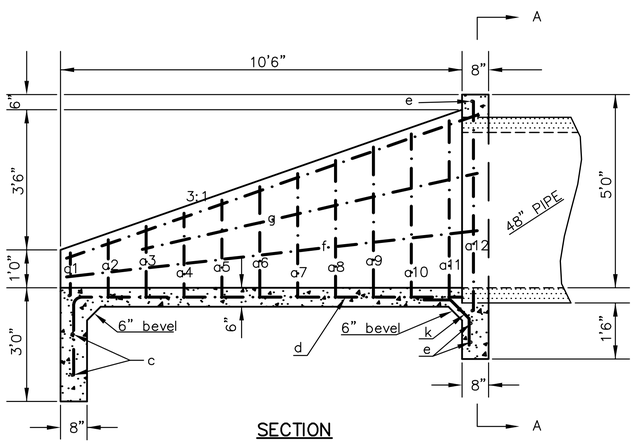

SECTION

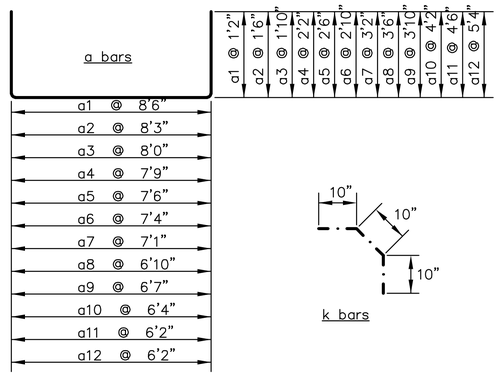

k bars

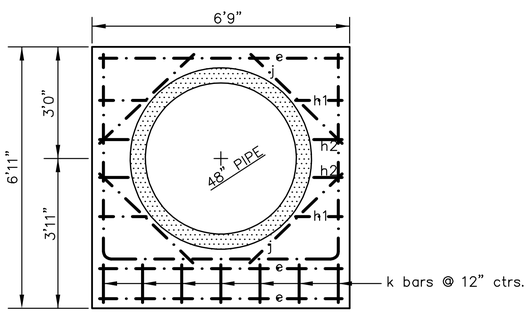

A–A SECTION

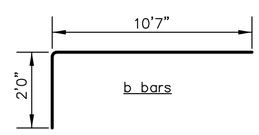

b bars

HEADWALL FOR 48" PIPE

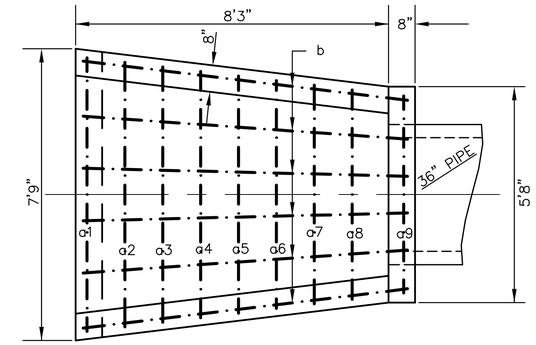

All exposed edges to have 1/2" bevel

TABLE OF QUANTITIES				
BAR	NUMBER	LENGTH	SHAPE	WEIGHT
a1	1	8'7"		5.73
a2	1	9'0"		6.01
a3	1	9'7"		6.40
a4	1	10'0"		6.68
a5	1	10'5"		6.96
a6	1	10'10"		7.24
a7	1	11'3"		7.52
a8	1	11'10"		7.90
a9	1	14'0"		9.35
b	6	10'4"		41.42
c	2	7'0"		9.35
d	2	9'0"		12.02
e	3	5'4"		10.69
f	2	8'5"		11.24
g	2	4'7"		6.12
h1	4	1'6"		4.01
h2	4	10"		2.23
j	4	3'0"		8.02
k	6	2'6"		10.02
Total Rebar, lbs				178.91
Concrete, C.Y.				3.2

All rebars to be #4.

PLAN

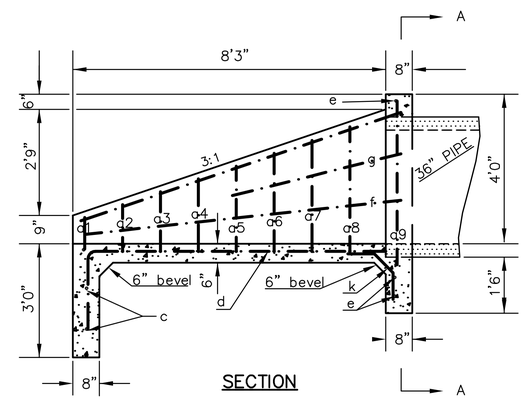

SECTION

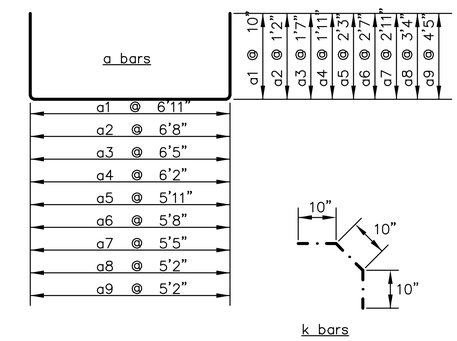

k bars

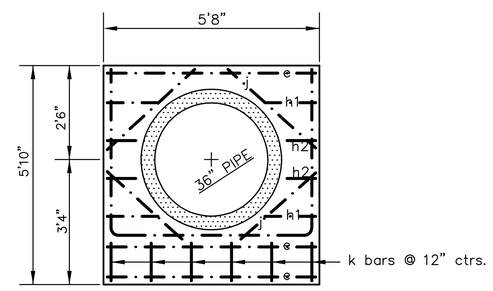

A–A SECTION

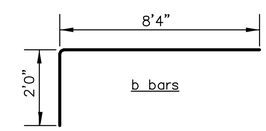

b bars

HEADWALL FOR 36" PIPE

MARK	DESCRIPTION	DATE	APPR.

MKEC ENGINEERING CONSULTANTS, INC.
411 N. WEBB ROAD
WICHITA, KS. 67206
316-684-9600

CITY OF WICHITA

LEVEE 'S'
WICHITA-VALLEY CENTER LOCAL FLOOD PROTECTION PROJECT
WICHITA, KANSAS

PREPARED FOR
THE CITY OF WICHITA, KANSAS
455 N. MAIN STREET
WICHITA, KANSAS 67202

DESIGNED BY: JAY R. ANGLEMYER		DATE: 09/Oct/12
DWN BY: STAFF	CKD BY: STAFF	APP BY: JRA

FILE NAME: J:\Civil\07866\dwg\Drainage\07866_S_Outfall Structure Dtls

MKEC PROJ. NO. 0701040866

LEVEE S
OUTFALL STRUCTURE
DETAILS

D-2.01