BENCHMARK:
BM #3 – "□" Chiseled in the Back of Curb in the South Curb Line of 45th Street South
Sta. 113+04, 68' Rt.
Elev. = 1279.90 MSL

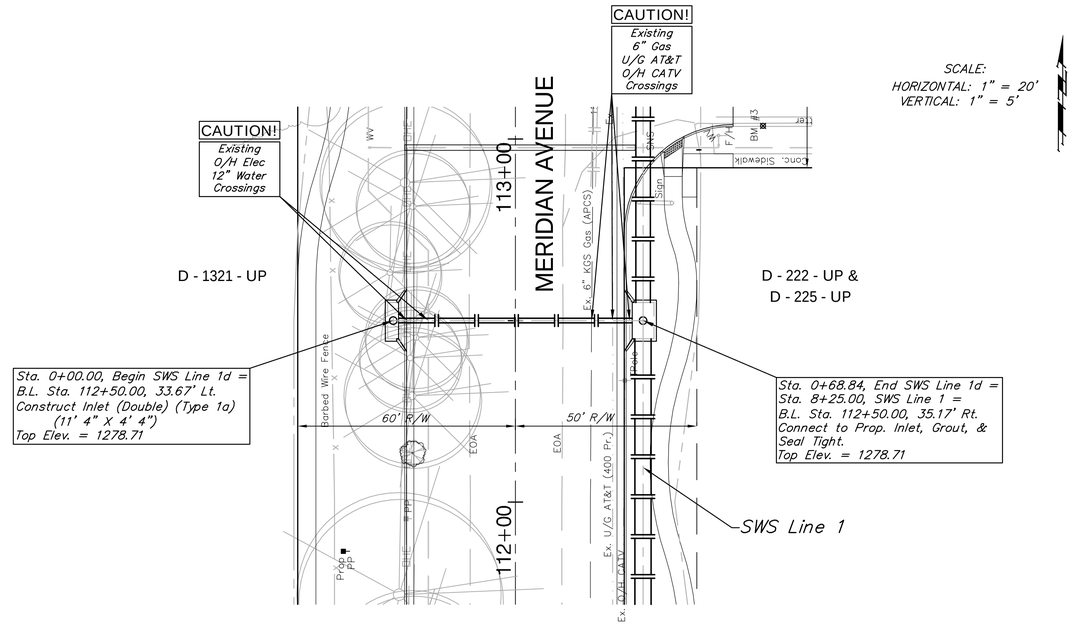

SCALE:
HORIZONTAL: 1" = 20'
VERTICAL: 1" = 5'

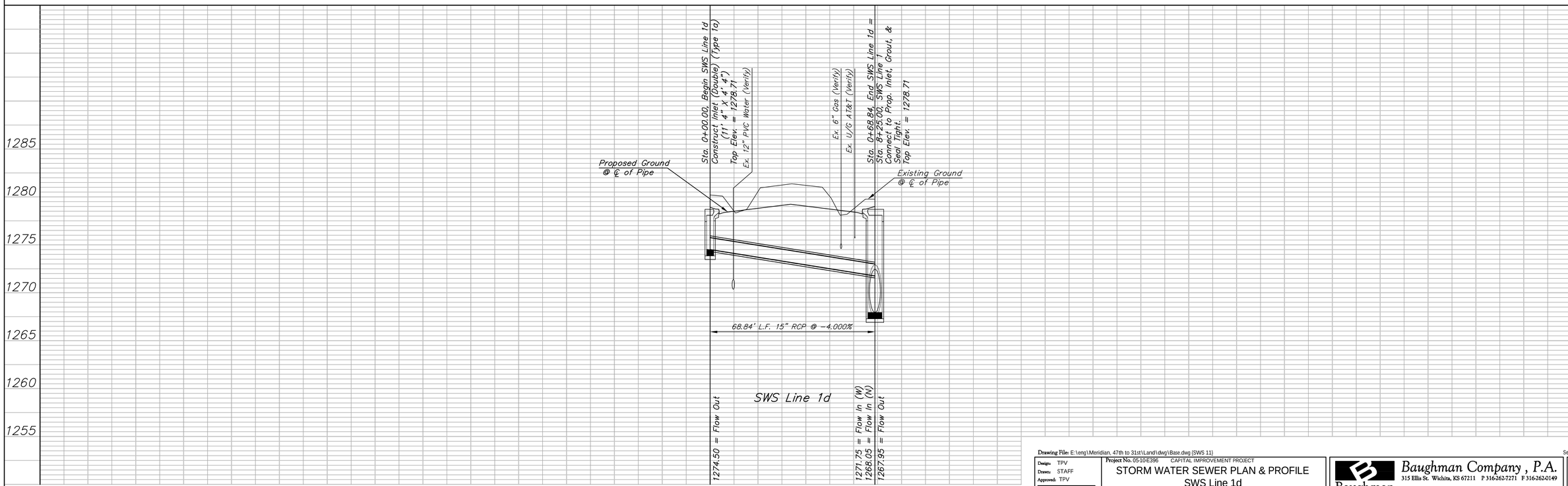

Drawing File: E:\eng\Meridian, 47th to 31st\Land\dwg\Base.dwg {SWS 11}

September 2009

Design: TPV Drawn: STAFF Approved: TPV Scale: NOTED	Project No. 05-10-E396 CAPITAL IMPROVEMENT PROJECT STORM WATER SEWER PLAN & PROFILE SWS Line 1d MERIDIAN AVENUE - 47TH STREET SOUTH to 31ST STREET SOUTH	Baughman Company , P.A. 315 Ellis St. Wichita, KS 67211 P 316-262-7271 F 316-262-0149 Baughman ENGINEERING | SURVEYING | PLANNING | LANDSCAPE ARCHITECTURE