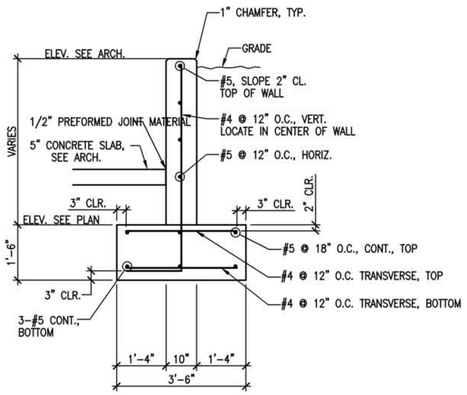

S1 RETAINING WALL A SECTION

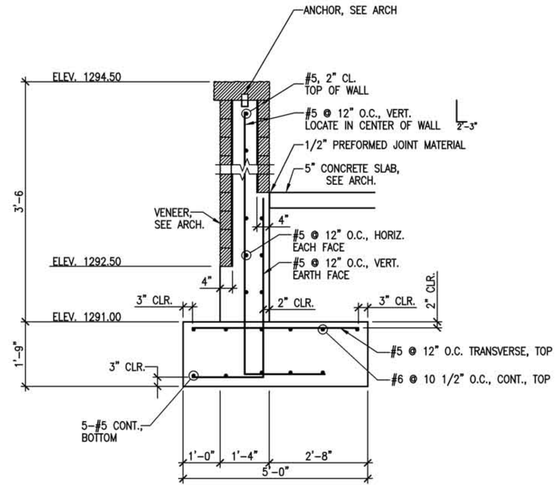

S2 RETAINING WALL B SECTION

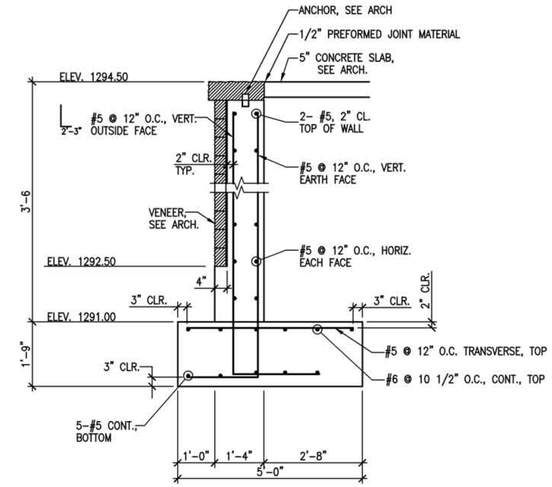

S3 RETAINING WALL B SECTION

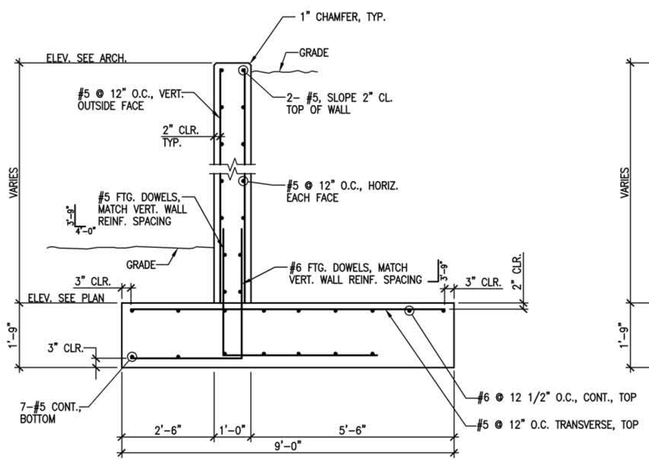

S4 RETAINING WALL C SECTION

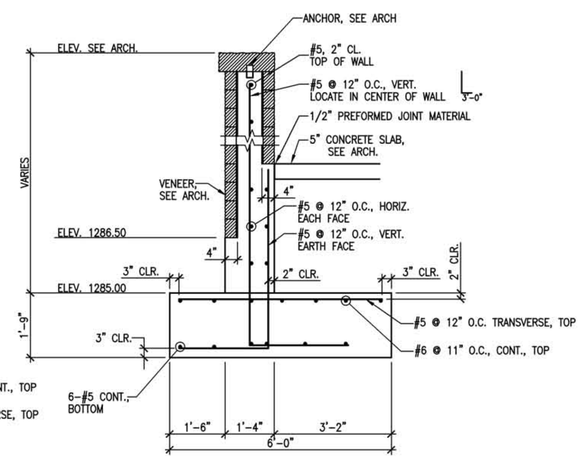

S5 RETAINING WALL D SECTION

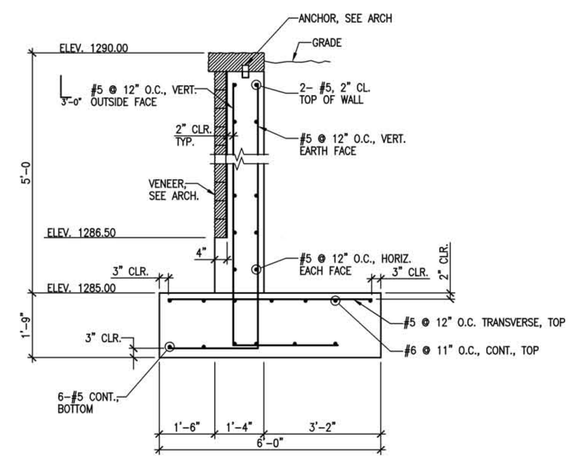

S6 RETAINING WALL D SECTION

PRINTS ISSUED

DATE	PURPOSE	NO.
10.05.09	FIELD CHECK	
11.12.09	OFFICE CHECK	
02.01.10	FINAL PLANS	

RIVER CORRIDOR IMPROVEMNTS PHASE 1C:
WICHITA, KS

LawKingdon Architecture
Engineering · Planning · Interiors · Landscapes

LawKingdon Architecture
345 RIVERVIEW, WICHITA, KS 67203
Phone (316) 268-0230 Fax: (316) 268-0205
CONTACT: JAMES URBAN, PE

PROJECT NUMBER:
08386

SHEET TITLE:
WALL SECTIONS

SHEET NUMBER:
S2.2

WILSON & COMPANY
ENGINEERS & ARCHITECTS