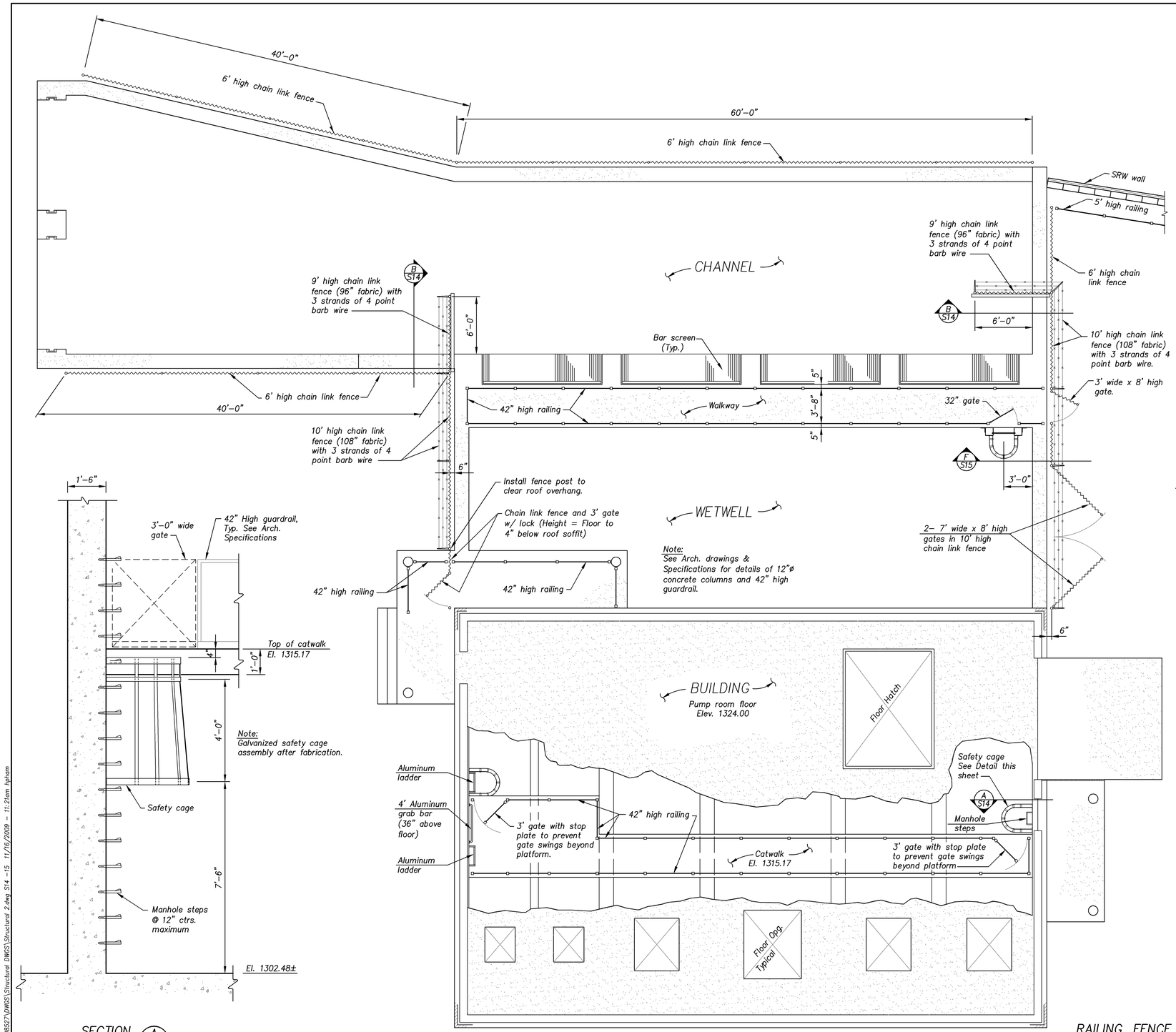

RAILING, FENCE PLAN

Scale: 3/16" = 1'-0"

SECTION A S14

1/2" = 1'-0"

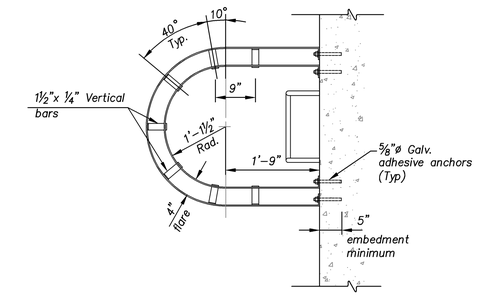

SAFETY CAGE DETAIL

Scale: 3/4" = 1'-0"

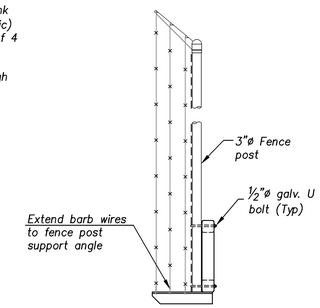

END VIEW

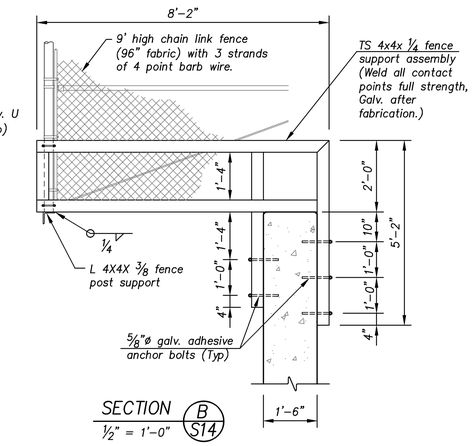

SECTION B S14

1/2" = 1'-0"

CITY OF WICHITA, KANSAS

PUMP STATION NO. 11

STRUCTURAL

PUMP STATION

RAILING, FENCE PLAN & SECTIONS

CFS

Cook, Flatt & Strobel ENGINEERS, P.A.

DESIGNED	KMB	SCALE	As Shown
DETAILED	HAP	DATE	10-30-09
CHECKED		SHEET	S14 OF S17

J:\2008Proj\08527\DWGS\Structural DWGS\Structural 2.dwg S14 -15 11/16/2009 - 11:21am hpham