| STATE | PROJECT NO. | YEAR | SHEET NO. | TOTAL SHEETS |
|---|---|---|---|---|
| KANSAS | 87 N-0240-01 | 2004 | 7 | 42 |

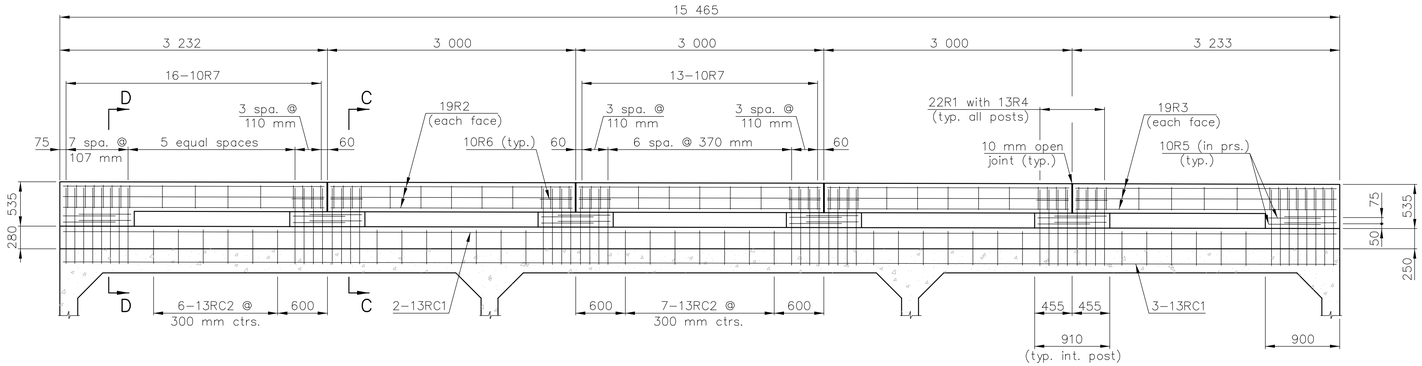


ELEVATION OF TRAFFIC RAIL

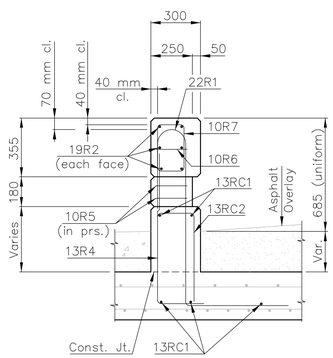


SECTION C-C

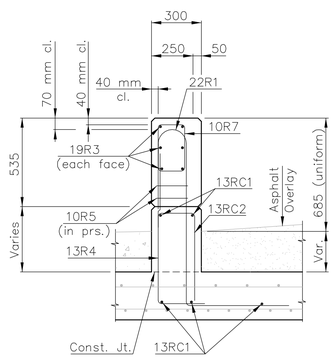


SECTION D-D

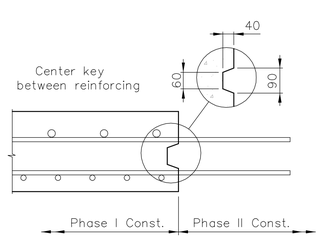


TRANSVERSE CONSTRUCTION JOINT

Construct key in floor & slab only

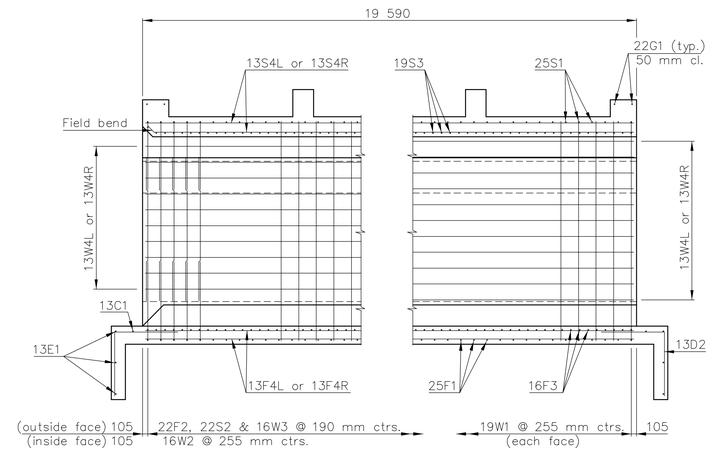


LONGITUDINAL ELEVATION AND SECTION

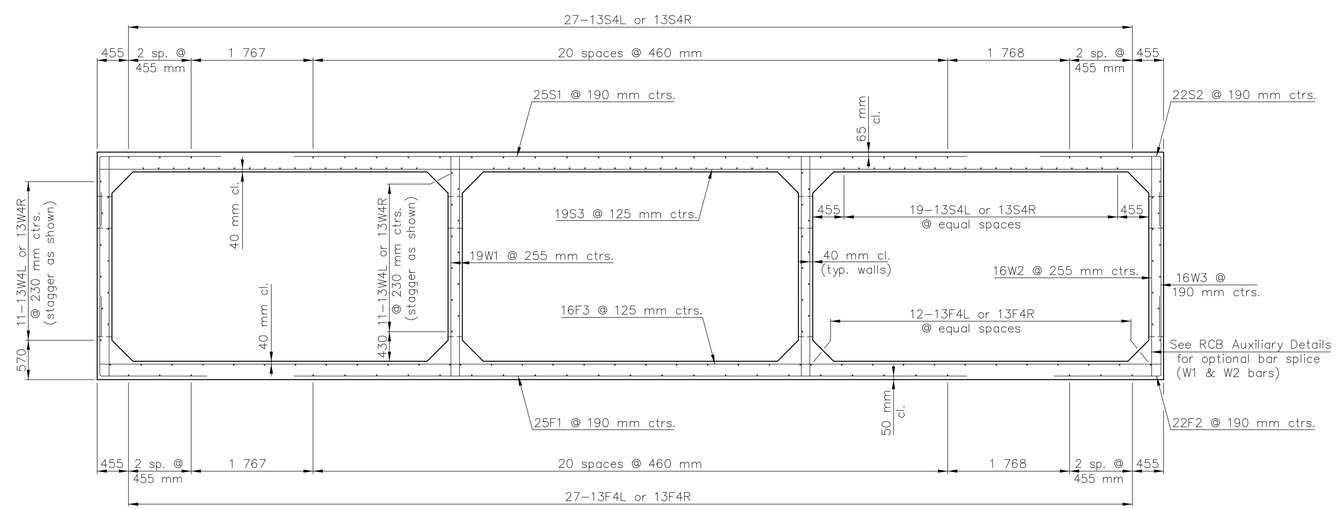


TYPICAL SECTION

Note: F4L, S4L & W4L bars are in Phase I Const.
F4R, S4R & W4R bars are in Phase II Const.

PROJECT NO. 87 N-0240-01

3-4.875 X 2.745 m R.F.B. DETAILS

21ST ST. OVER CHISHOLM CREEK

STA. 1+978

CITY OF WICHITA

Cook, Flatt & Strobel
ENGINEERS, P.A.

| | | | |
|---|---|---|---|
| DESIGNED | KMB | SCALE | |
| DETAILED | DEG | DATE | |
| QUANTITIES | | SHEET | OF |

J:\02518\DWGS\RCB1 1:50 (1:.05)