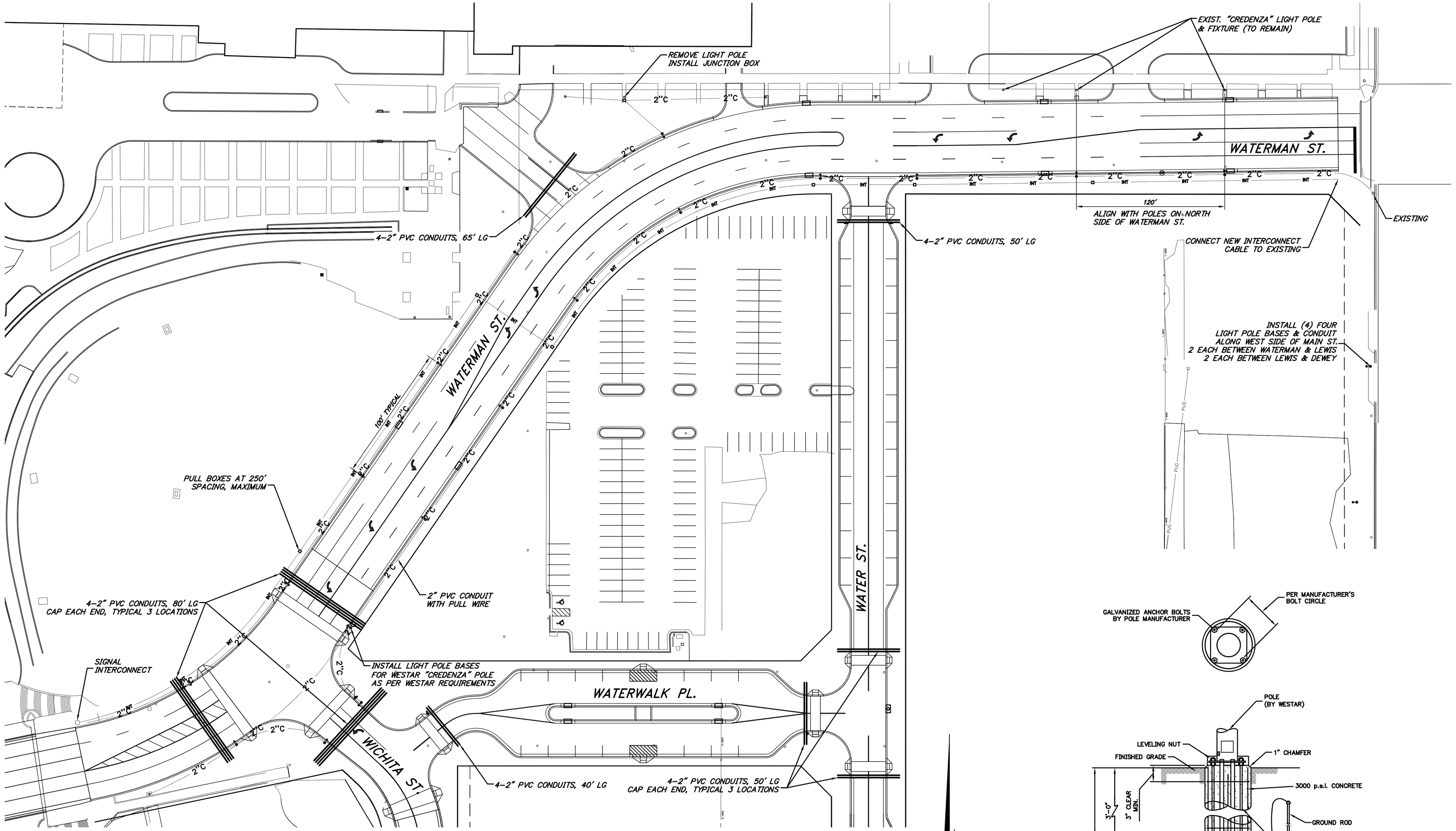

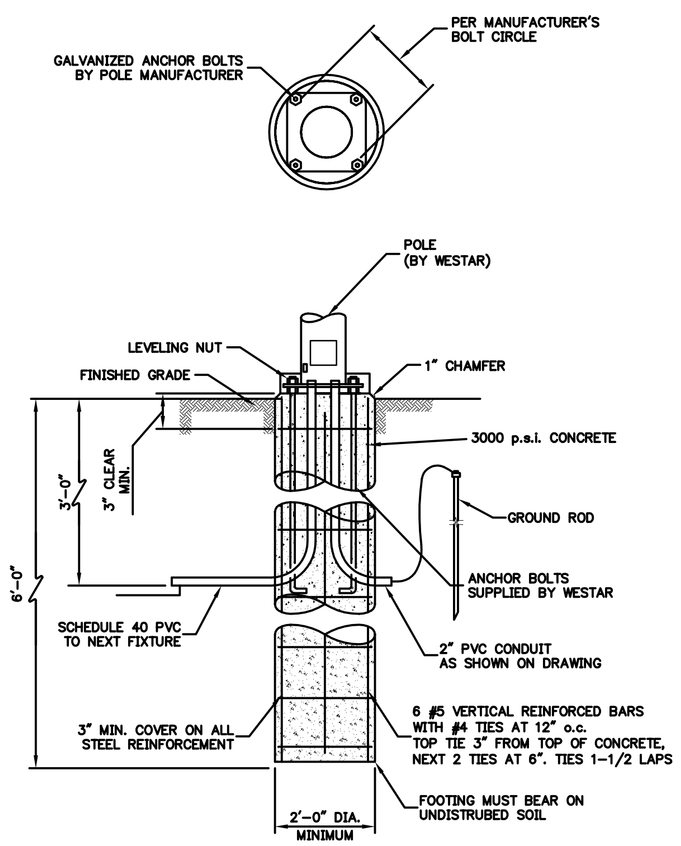

LEGEND

INT	INTERCONNECT CABLE
2"C	2" PVC CONDUIT FOR LIGHTING CIRCUIT
	LIGHT POLE

GRAPHIC SCALE

40 0 20 40 80

(IN FEET)
1 inch = 40 ft.

LIGHT POLE BASE DETAIL

N.T.S.

GossenLivingston
Architecture
420 South Emporia
Wichita, KS 67202
Tel: (316) 265-9367
Fax: (316) 265-5646
Email: architects@gl.com

© 2005 Gossen Livingston Associates, Inc.
The drawing and all information herein is the exclusive property of Gossen Livingston Associates, Inc. and is not to be copied or used in any way without the express written consent of Gossen Livingston Associates, Inc. All drawings, specification, ideas, designs and arrangements appearing herein constitute the original and unpublished Work of:
Gossen Livingston Associates, Inc.

JOHNSON & ASSOCIATES
Johnson & Associates, Inc.
100 E. California Ave. - Third Floor
Oklahoma City, OK 73104
(405) 235-8075 FAX (405) 235-8078
Certificate of Authorization #E-1128 EXP. DATE: 12-31-2005

WICHITA WATERWALK

PUBLIC IMPROVEMENTS PHASE I

Mark	Date:	Description
	5.30.06	BID SET
	4.27.06	FIELD CHECK SET

LIGHT POLE BASE & SLEEVING PLAN

Job No.	
Date	05-30-06
Drawn	BC
Checked	PB

P6.1 OF 1

Dwg. 44 of 96

Acad File: H:\2315\2315 Phase 2 Sheets\2315PH2-PB1.dwg, 5/27/2006 10:26 AM, Peter Borell
XREFS: QXWCD: