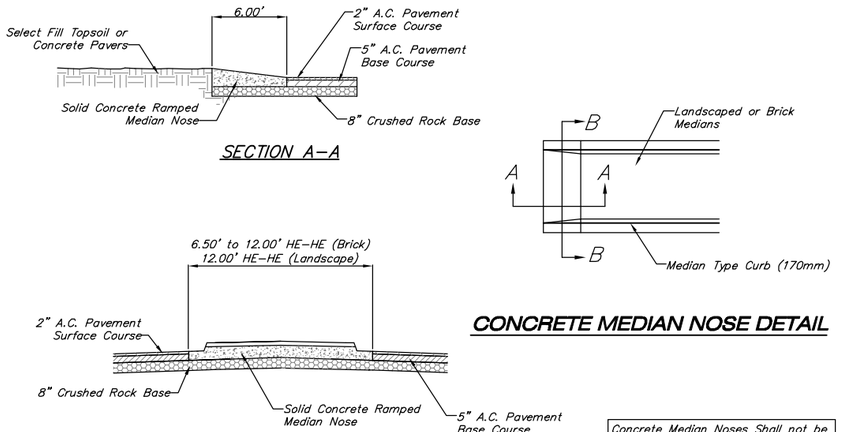

CONCRETE MEDIAN NOSE DETAIL

Concrete Median Noses Shall not be Paid for Directly, but Shall be Considered SUBSIDIARY to "Curb & Gutter (Combined)(Type III)(8")".

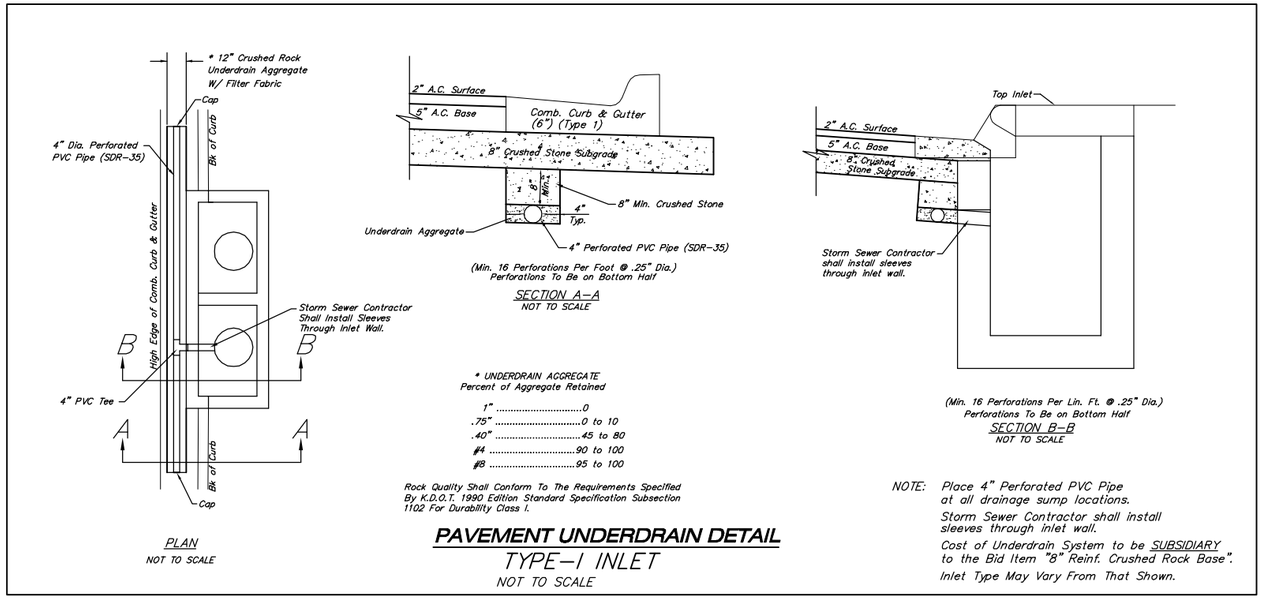

* UNDERDRAIN AGGREGATE
Percent of Aggregate Retained

1"	0
.75"	0 to 10
.40"	45 to 80
#4	90 to 100
#8	95 to 100

Rock Quality Shall Conform To The Requirements Specified By K.D.O.T. 1990 Edition Standard Specification Subsection 1102 For Durability Class I.

PAVEMENT UNDERDRAIN DETAIL

TYPE–I INLET

NOT TO SCALE

NOTE: Place 4" Perforated PVC Pipe at all drainage sump locations.

Storm Sewer Contractor shall install sleeves through inlet wall.

Cost of Underdrain System to be SUBSIDIARY to the Bid Item "8" Reinf. Crushed Rock Base".

Inlet Type May Vary From That Shown.

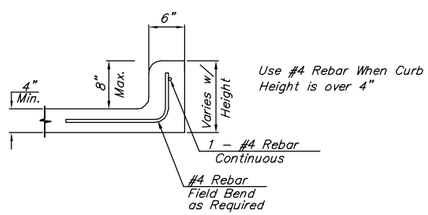

PROTECTION CURB DETAIL

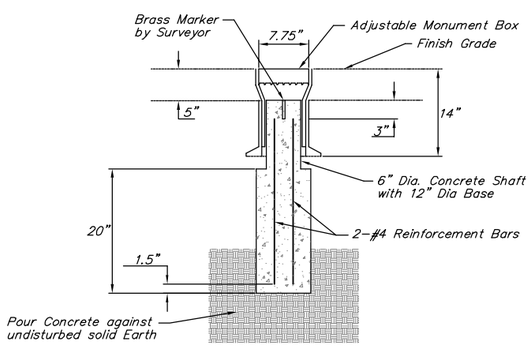

MONUMENT BOX

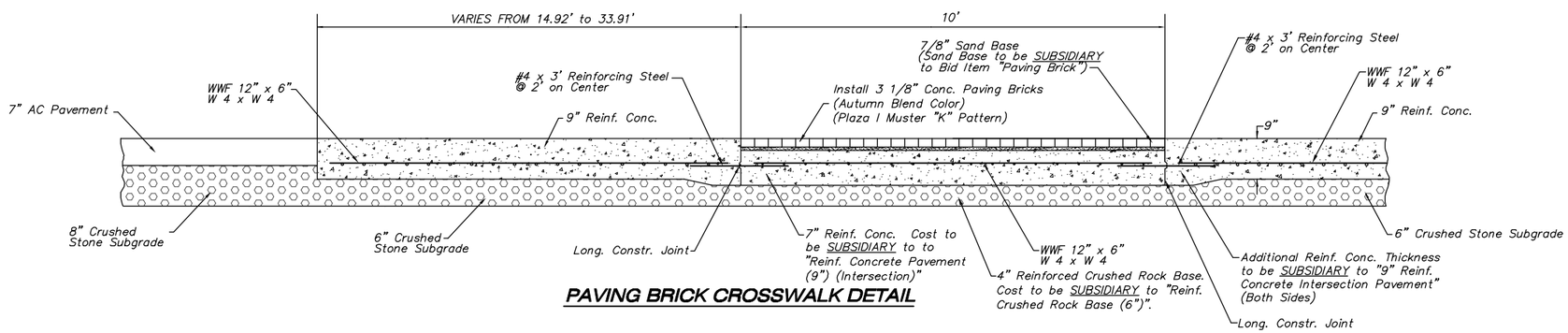

PAVING BRICK CROSSWALK DETAIL