STATE	PROJECT NO.	YEAR	SHEET NO.	TOTAL SHEETS
KANSAS	87 N-0239-01	2004	11	47

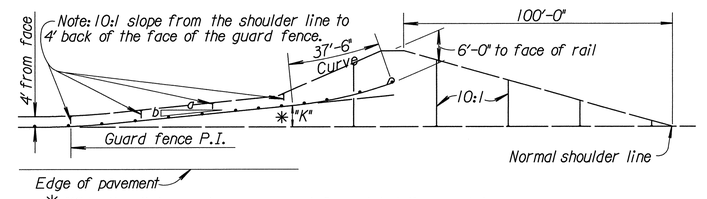

✳ "K" is the distance shown on guard fence tabulations and is measured at the beginning of the 37'-6" curve.

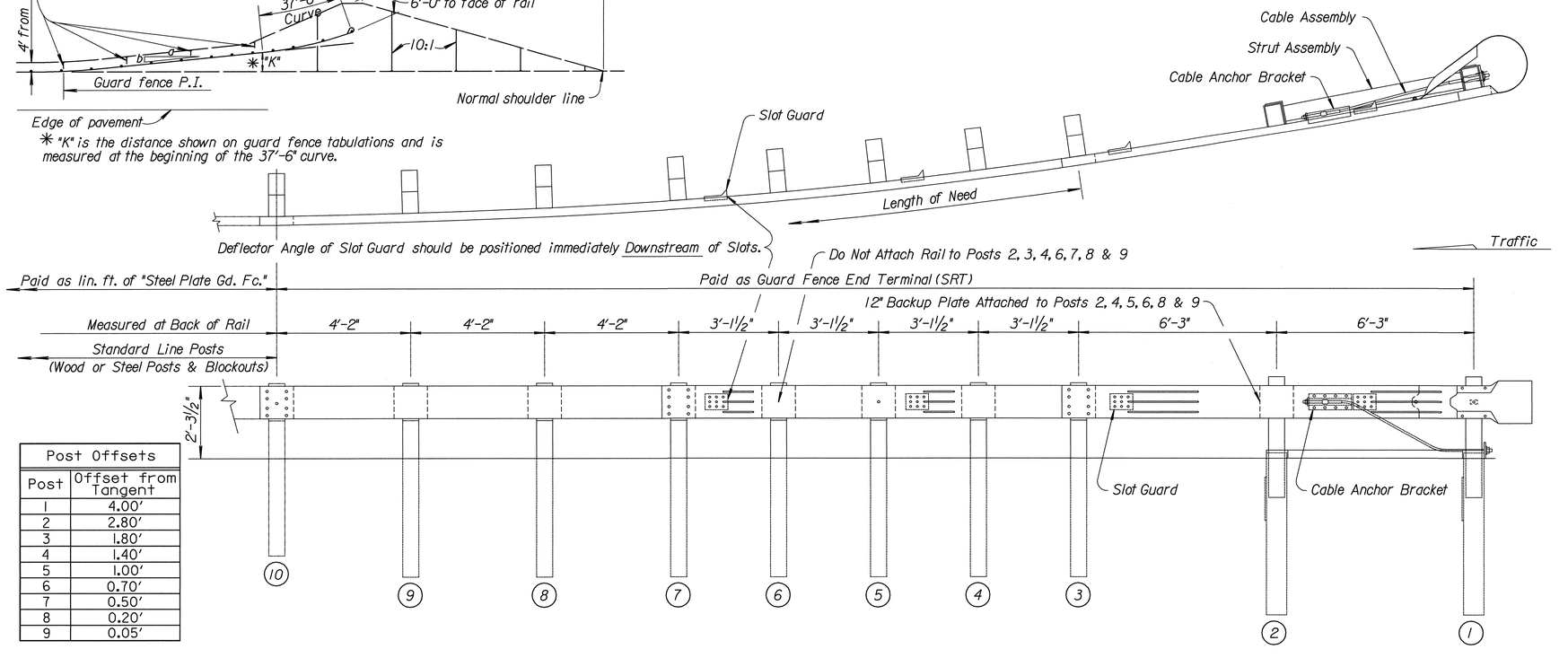

Post Offsets	
Post	Offset from Tangent
1	4.00'
2	2.80'
3	1.80'
4	1.40'
5	1.00'
6	0.70'
7	0.50'
8	0.20'
9	0.05'

GENERAL NOTE

See RD611 & RD613 for details of guard rail not shown.

Posts ① through ⑨ on the Slotted Rail Terminal shall be wood, regardless of post material used on remainder of the installation.

All guard fence splices shall be lapped in the direction of Traffic. Where traffic is temporarily carried in the direction opposite of the final configuration, the rail splices shall be lapped in the direction of the permanent traffic.

All work and materials required for installation of this terminal shall be paid under to the bid item "Guard Fence End Terminal (SRT)".

All steel parts shall be galvanized after fabrication.

The post offset dimensions are given to the center of the traffic face of the blockouts. Except at the first two posts, where dimension is to the center of the traffic face of the post. Offset points are to be located by chord measurements at the back of the rail equal to the nominal post spacings shown. Posts are to be set approximately radial to the railing at each post location.

Terminal shown with 3-12.5' long sections of rail. Optional designing utilizing one 12.5' section of rail between posts ① and ③ and a 25' section of rail for the remainder of the terminal is considered acceptable. When this optional design is provided, an additional backup plate is required at post 7.

Standard splices, standard hardware connections (bolts, nuts, & washers) are used except where noted. See RD611 for additional details.

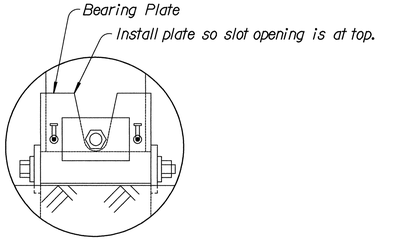

BEARING PLATE ORIENTATION

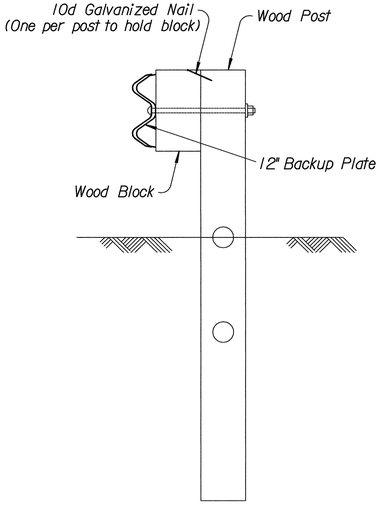

DETAIL OF POST #5

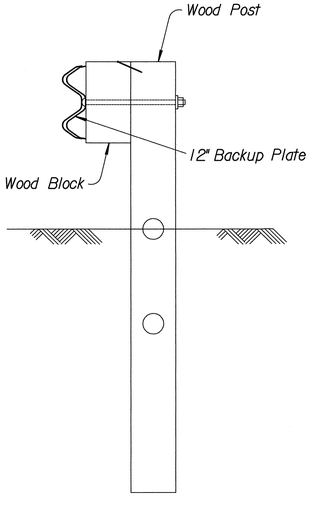

DETAIL OF POSTS #4, #6, #8 & #9

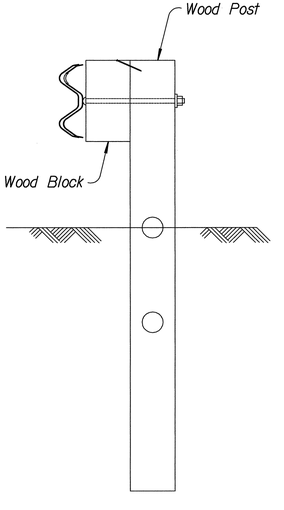

DETAIL OF POSTS #3 & #7

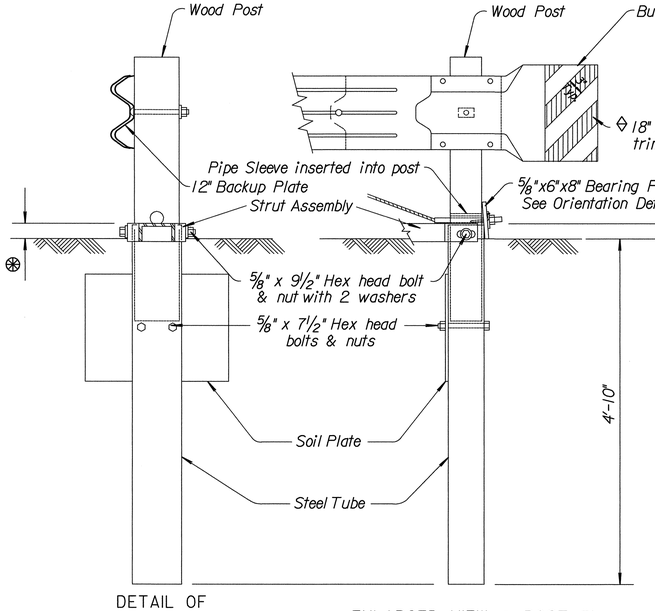

DETAIL OF POST #2

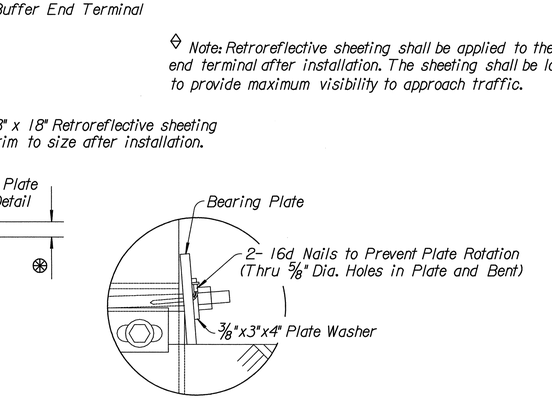

ENLARGED VIEW @ POST #1

◊ Note: Retroreflective sheeting shall be applied to the buffer end terminal after installation. The sheeting shall be located to provide maximum visibility to approach traffic.

⊛ 4" maximum projection of the steel tube above the 10:1 surface slope.

NO.	DATE	REVISIONS	BY	APP'D
4	5-18-00	Added note for temporary traffic	R.J.S.	J.O.B.
3	5-12-98	Backup plate for optional design	R.J.S.	J.O.B.
2	1- 5-98	4" Steel tube projection	R.J.S.	J.O.B.
1	10-15-97	Added Retroreflective Sheeting & Rev. Backup Plate loc. & pay item.	R.J.S.	J.O.B.

KANSAS DEPARTMENT OF TRANSPORTATION

GUARD FENCE END TERMINAL (SRT)

RD621

FHWA APPROVAL	6-15-00	APP'D James O. Brewer	
DESIGNED	DETAILED	QUANTITIES	TRACED
DESIGN CK.	DETAIL CK.	QUAN.CK.	TRACE CK.

Drawn By : $$USERNAME$$ Plotted : $$$$$SYTIME$$$$$$
File : $$$$$$$