SERVICE BOX CONSTRUCTION/INSTALLATION DETAILS

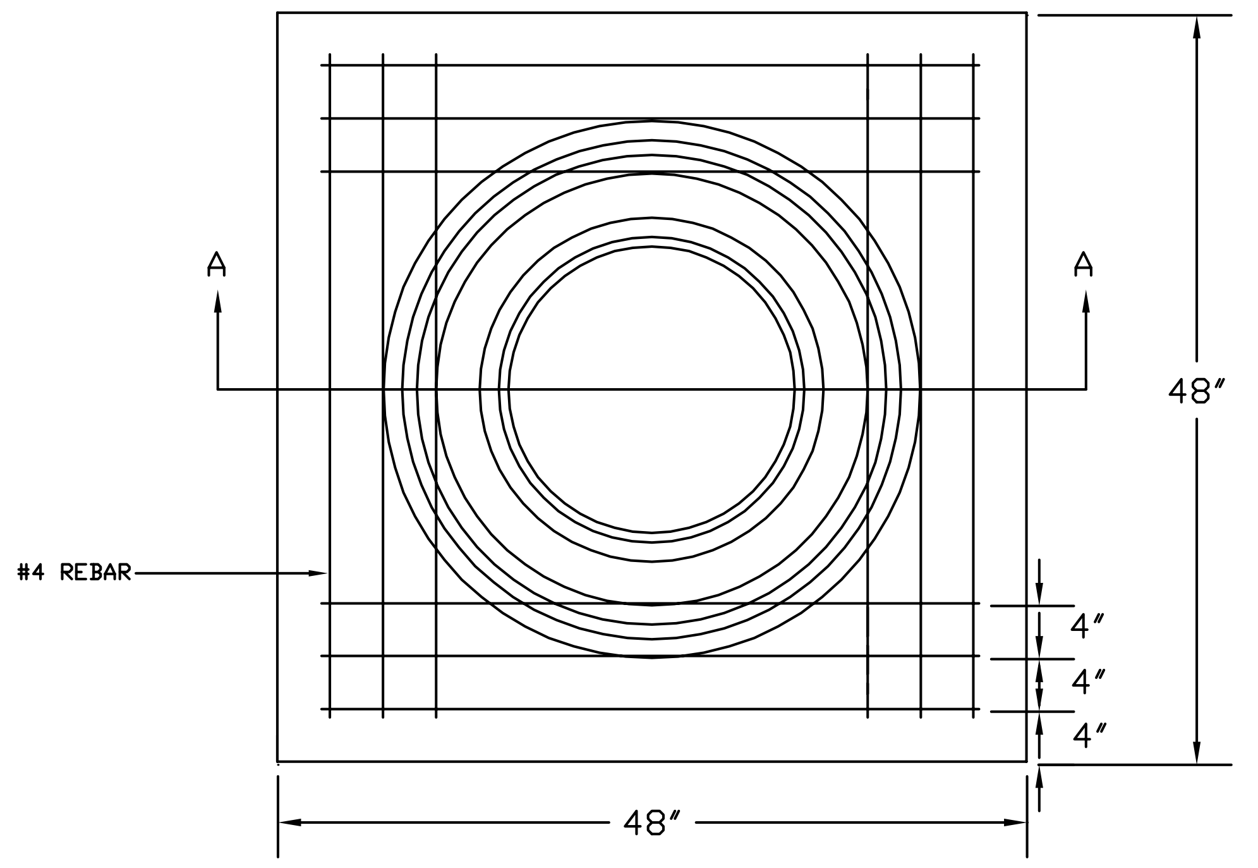
A
A
48"
#4 REBAR
4"
4"
4"
48"

PRE-CAST CONCRETE
SERVICE BOX

(36" I.D. X 54" RCP)
with 6" CAP

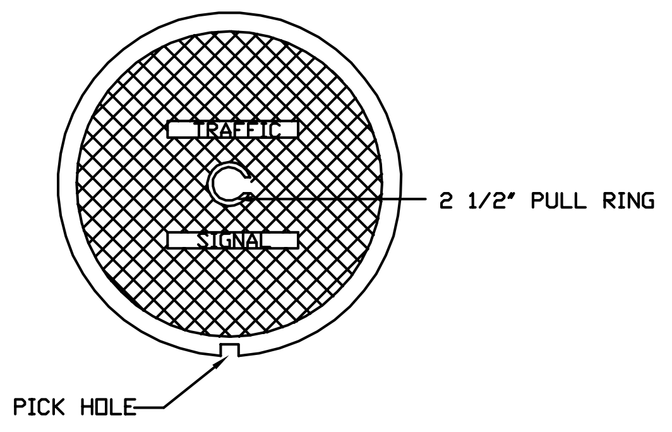
TRAFFIC
SIGNAL
2 1/2" PULL RING
PICK HOLE

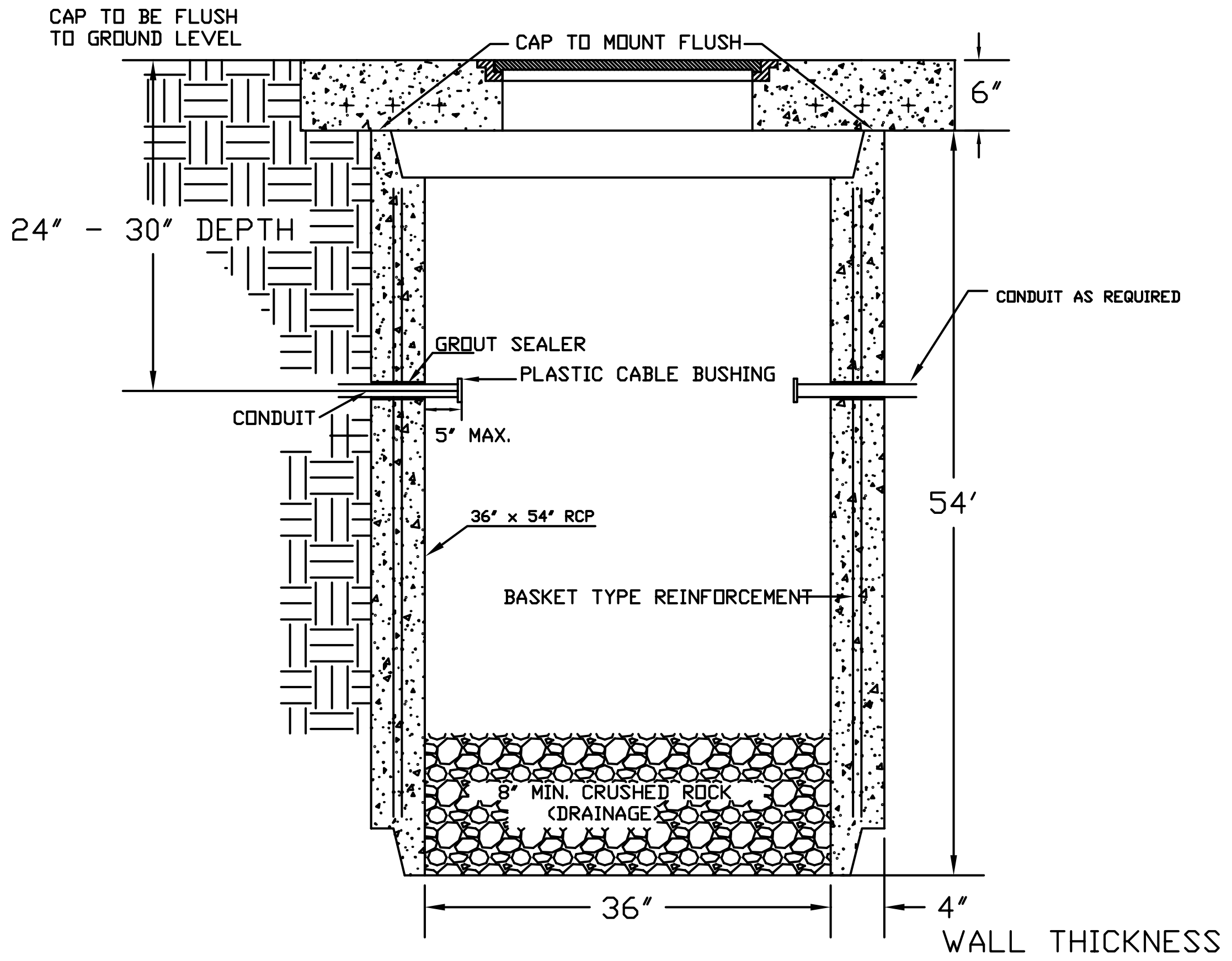
CAP TO BE FLUSH
TO GROUND LEVEL
CAP TO MOUNT FLUSH
6"
24" - 30" DEPTH
CONDUIT AS REQUIRED
GROUT SEALER
PLASTIC CABLE BUSHING
CONDUIT
5" MAX.
36" x 54" RCP
54'
BASKET TYPE REINFORCEMENT
8" MIN. CRUSHED ROCK
(DRAINAGE)
36"
4"
WALL THICKNESS

SECTION A-A

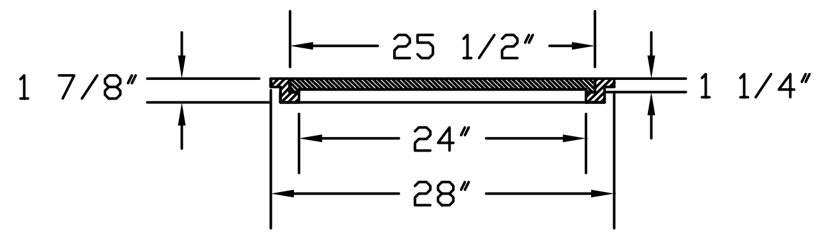
25 1/2"
1 7/8"
1 1/4"
24"
28"

RING & COVER DETAIL

170 CONTROLLER PAD DETAILS

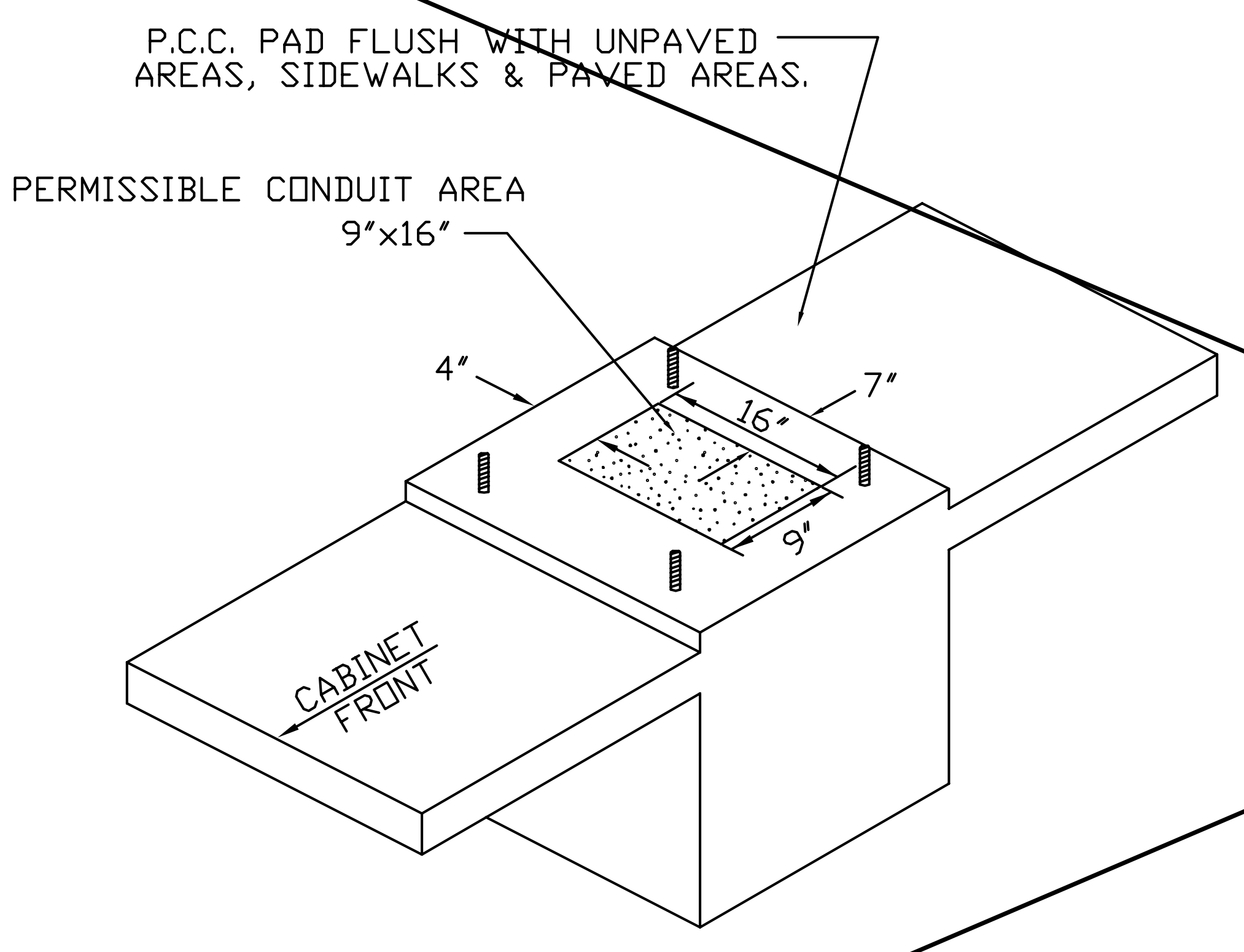
P.C.C. PAD FLUSH WITH UNPAVED
AREAS, SIDEWALKS & PAVED AREAS.
PERMISSIBLE CONDUIT AREA
9"x16"
4"
7"
16"
9"
CABINET
FRONT

REBAR SHALL BE ASTM A615M GRADE
300 MEETING THE REQUIREMENTS
OF SUBSECTION SPECIFICATIONS.

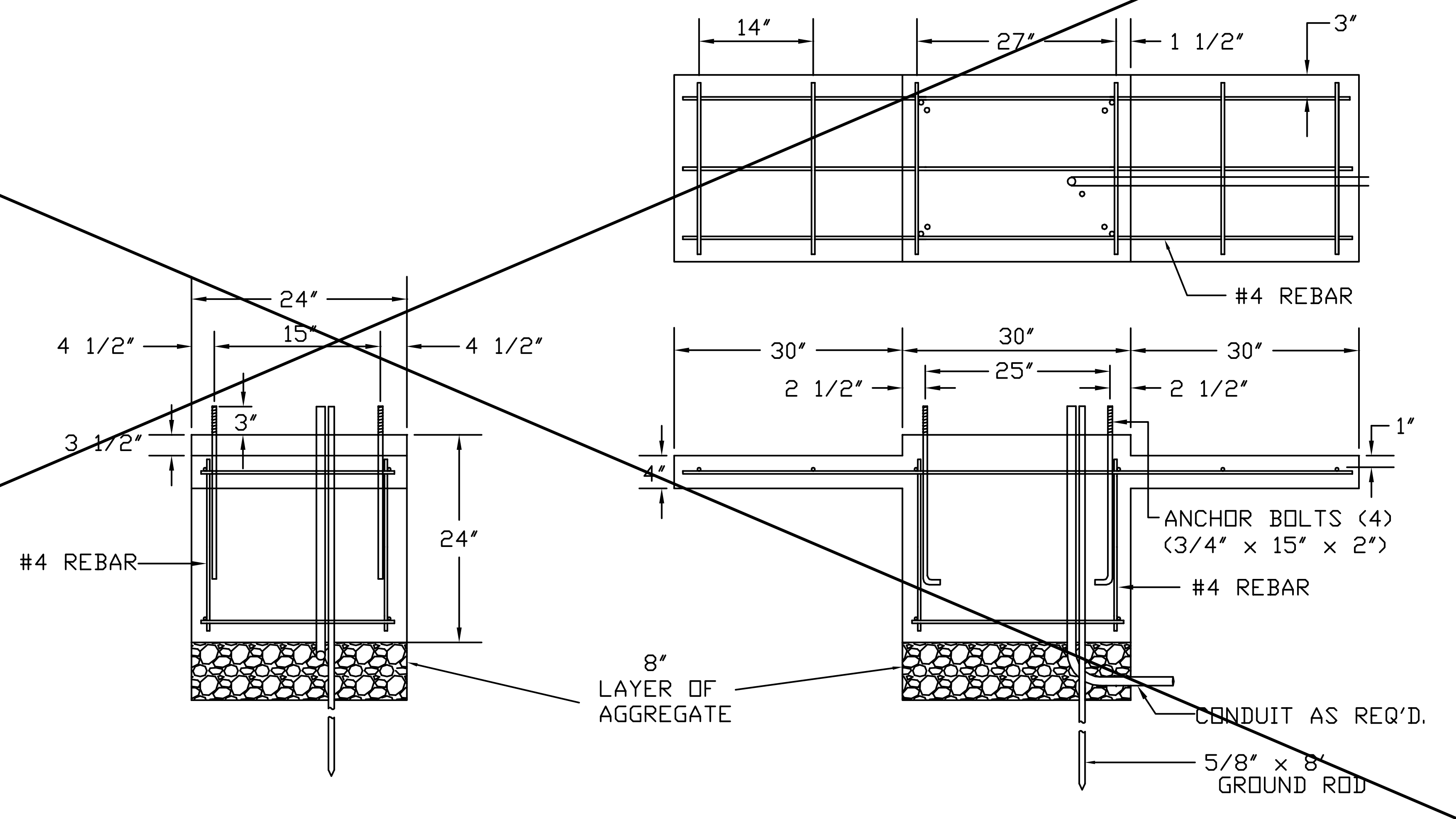
14"
27"
1 1/2"
3"
#4 REBAR
24"
15"
4 1/2"
4 1/2"
3"
3 1/2"
24"
#4 REBAR
8"
LAYER OF
AGGREGATE
30"
30"
30"
25"
2 1/2"
2 1/2"
1"
4"
ANCHOR BOLTS (4)
(3/4" x 15" x 2")
#4 REBAR
CONDUIT AS REQ'D.
5/8" x 8'
GROUND ROD

SPECIAL SERVICE BOX

CONSTRUCTION/INSTALLATION DETAILS

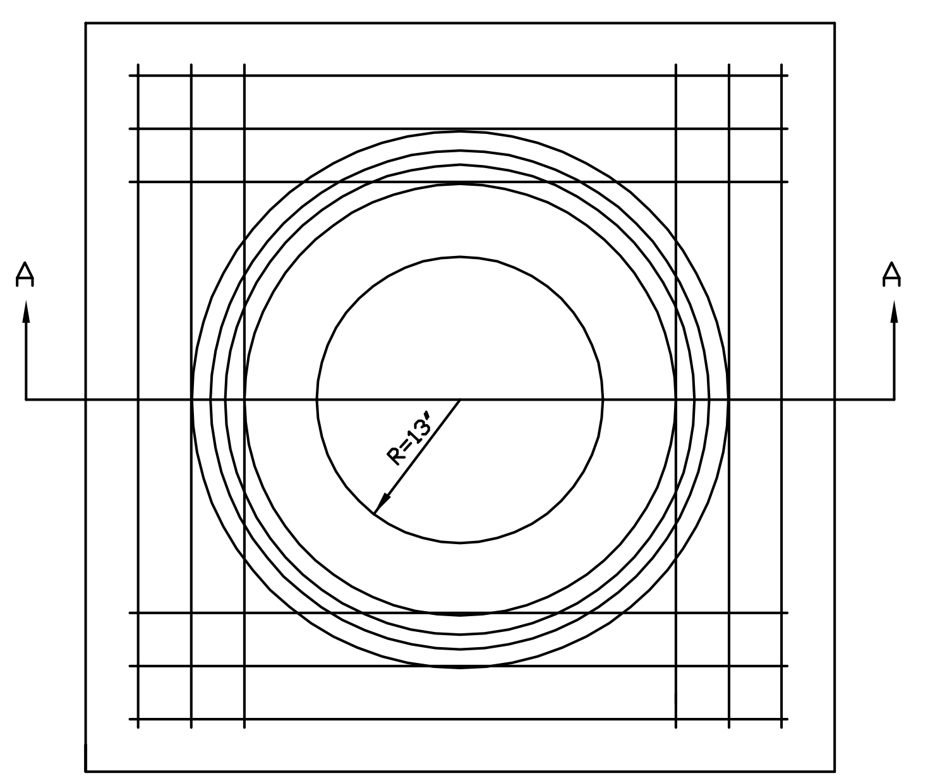

PRE-CAST CONCRETE
SERVICE BOX

(36" I.D. X 54" RCP)
with 6" CAP

NOTE: CAST IRON RING AND COVER SHALL BE NEENAH R1773 OR APPROVED EQUAL.

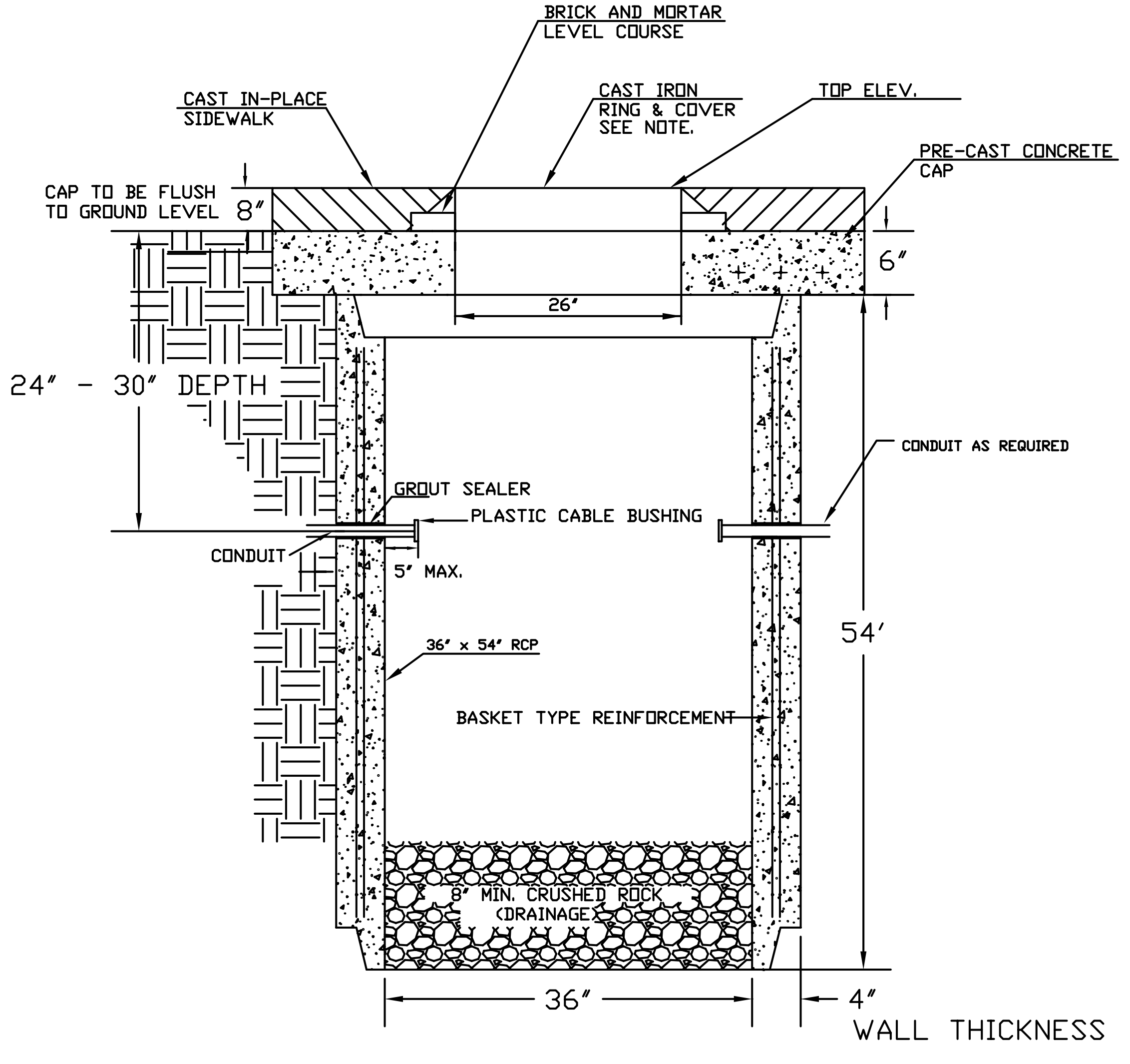
BRICK AND MORTAR
LEVEL COURSE
CAST IN-PLACE
SIDEWALK
CAST IRON
RING & COVER
SEE NOTE.
TOP ELEV.
PRE-CAST CONCRETE
CAP
CAP TO BE FLUSH
TO GROUND LEVEL
8"
6"
26"
24" - 30" DEPTH
CONDUIT AS REQUIRED
GROUT SEALER
PLASTIC CABLE BUSHING
CONDUIT
5" MAX.
36" x 54" RCP
54'
BASKET TYPE REINFORCEMENT
8" MIN. CRUSHED ROCK
(DRAINAGE)
36"
4"
WALL THICKNESS

CONDUIT/DETECTOR WIRE INSTALLATION DETAILS

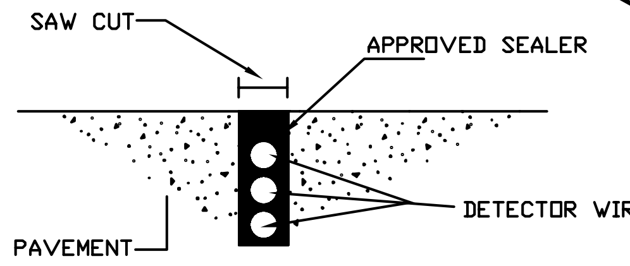
SAW CUT
APPROVED SEALER
DETECTOR WIRING
PAVEMENT

STD. CURB & GUTTER

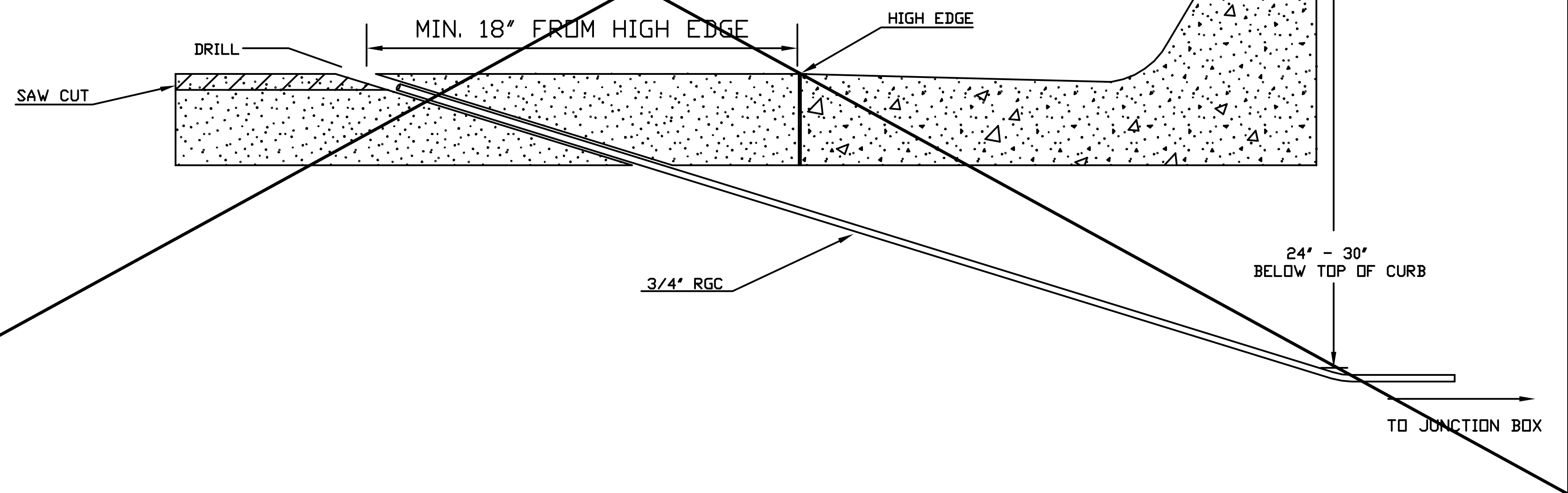
MIN. 18" FROM HIGH EDGE
HIGH EDGE
DRILL
SAW CUT
3/4" RGC
24" - 30"
BELOW TOP OF CURB
TO JUNCTION BOX

NOTES:

SERVICE & JUNCTION BOX:

1. CONDUIT CONNECTION TO BE FLUSH TO WITHIN 5" OF INSIDE FACE OF SIDE WALL, CONDUIT TO DRAIN INTO SERVICE BOX.
2. CONDUIT CONNECTIONS TO SERVICE BOX SHALL BE TERMINATED WITH PLASTIC CABLE BUSHING.
3. CONDUIT SHALL BE SEALED WITH APPROVED SEALER AT INSIDE WALL FACE.
4. ALL SERVICE & JUNCTION BOXES TO HAVE 8" OF CRUSHED ROCK.

TRENCHING:

1. DEPTH TO BE 30" MINIMUM WITH ROCK & STUBBLE FREE BACKFILL TO SERVE AS BEDDING MATERIAL. MAINTAIN MINIMUM CONDUIT DEPTH IN TRENCH.
2. BACKFILL TO BE COMPACTED IN 6" LOOSE LIFTS BY HAND OR MECHANICAL TAMPING TO A 95% STANDARD DENSITY.

CONDUIT:

1. SLOPE CONDUIT TO DRAIN AS DIRECTED BY THE ENGINEER.
2. 3" RIGID STEEL CONDUIT BTWN. SERVICE BOXES.
   1 1/4" " " " BTWN. SERVICE & JUNCTION BOXES.
   3/4" " " " BTWN. JUNCTION BOXES.
   3/4" " " " BTWN. JUNCTION BOX & DETECTOR LOOP SAW CUT

SERVICE/JUNCTION BOX, CONTROLLER PAD
CONSTRUCTION/INSTALLATION DETAILS

MAIN ST. & WATERMAN ST.

SERVICE/JUNCTION BOX, CONTROLLER PAD CONSTRUCTION/INSTALLATION DETAILS

PROJECT NUMBER

DRAWN BY: T.M.
DATE: MAY 97
APPROVED BY
REVISED BY: T.M.
DATE: MAY, 97

DIVISION OF TRAFFIC ENGINEERING
WM. G. McKINLEY P.E. TRAFFIC ENGINEER
SCALE
NO SCALE

Saved 05-26-2006 4:02:12 PM by JGA
Plot Scale 1:1 05-26-2006 4:06:43 PM by REJ
J:\SENTOUT\2005\05493\002\2006-05-26 to City\DWG\46-Service Box Details