STATE	PROJECT NO.	YEAR	SHEET NO.	TOTAL SHEETS
KANSAS	54-87 K-8258-01	2005	188	223

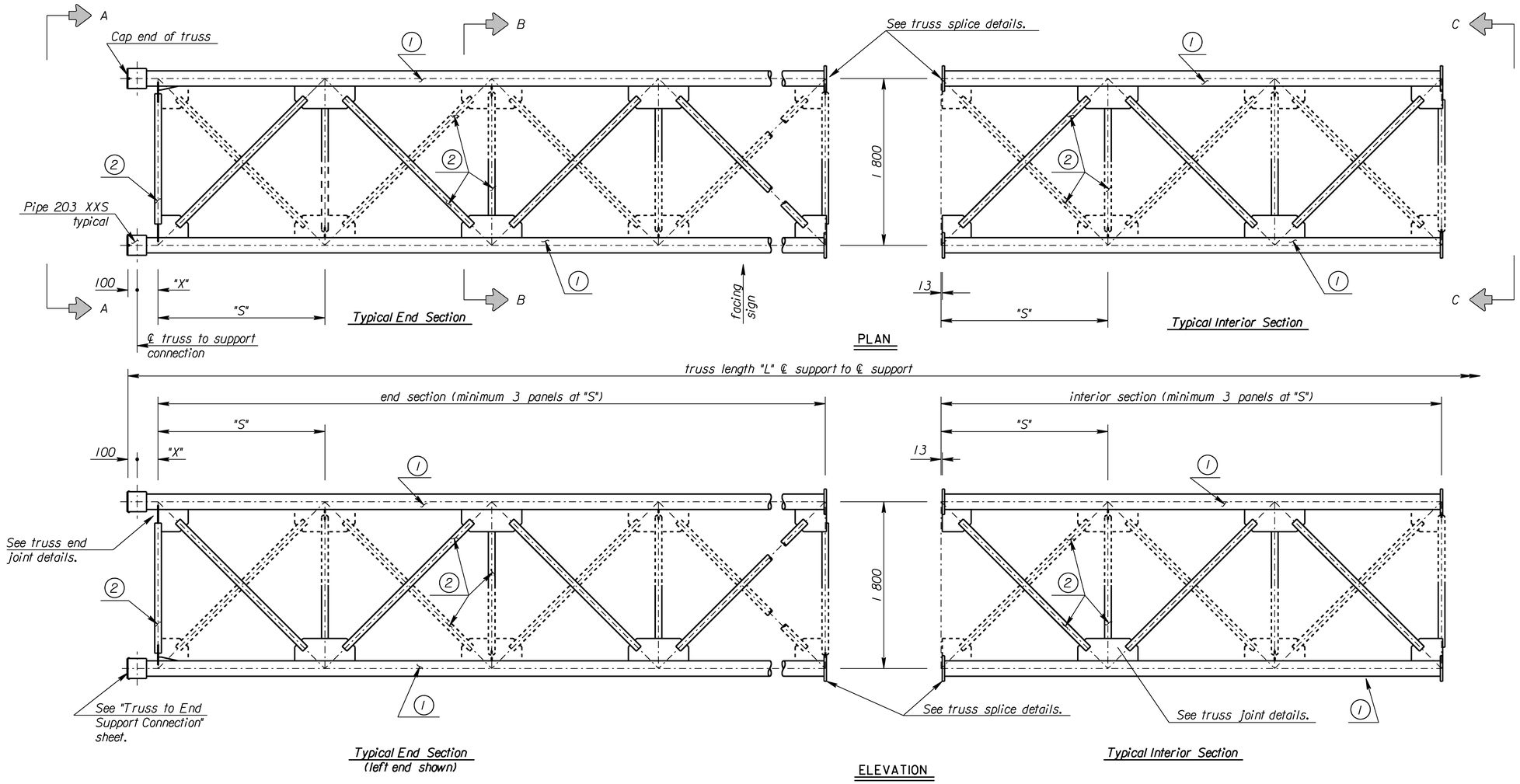

Note: Dashed lines used in plan and elevation views to distinguish bottom or rear portions of member 2.

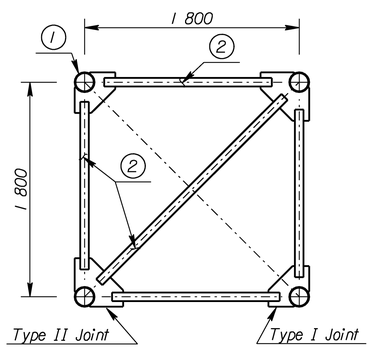

SECTION A-A
See truss end joint details.

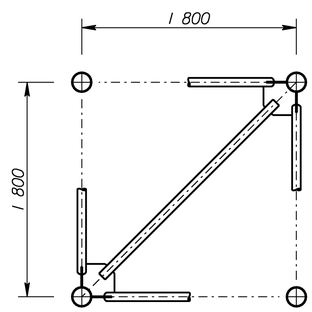

SECTION B-B
See truss joint details.

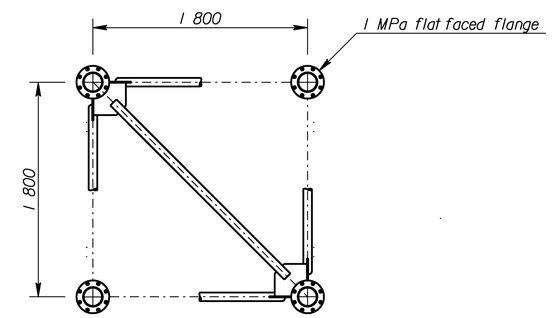

SECTION C-C
See truss splice details.

Note: See "Construction Layout" for wall thickness, "N","S","L" and "X" dimensions.

Member 1 is 168 mm O.D. pipe.

Member 2 is 73 mm O.D. pipe.

NO.	DATE	REVISIONS	BY	APP'D

KANSAS DEPARTMENT OF TRANSPORTATION

STANDARD STRUCTURAL SIGN SUPPORTS
SPAN TYPE OVERHEAD
STEEL ALTERNATE
TRUSS FRAMING PLAN AND DETAILS

SL15IC-03 SI SEDGWICK CO.

FHWA APPROVAL			4-10-97	APP'D		Kenneth F. Hurst	
DESIGNED	BFM	DETAILED	KFH	QUANTITIES		CADD	DJE
DESIGN CK.	RDH	DETAIL CK.	RDH	QUAN.CK.		CADD CK.	LES

Std. Base File: sl15lcsi.dgn - Plot 3
Plotted By: bond Plot Location: Bridge
File: F:\Working\K82580\1\SL Structures\SL-82580-15lcsi.dgn
Plot Date: 6/29/2005