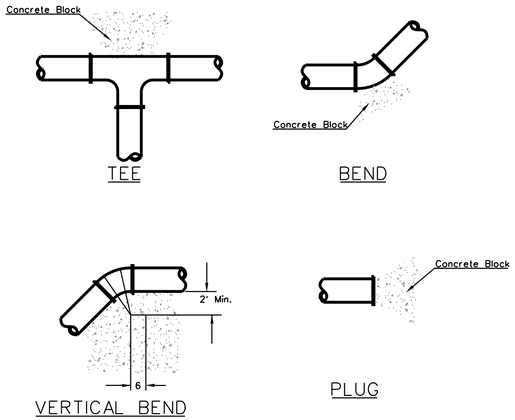

PIPE SIZE	THRUST AT FITTINGS IN TONS-AT 150*/IN² P					
	PLUG	90*	45*	22 1/2*	11 1/4*	TEE
6"	2.8	3.95	2.15	1.09	.55	2.8
8"	4.9	6.95	3.75	1.90	.96	4.9
12"	11.4	16.1	8.75	4.45	2.25	11.4
16"	20.15	28.5	15.4	7.85	3.95	20.15
20"	31.15	44.0	23.85	12.15	6.10	31.15
24"	44.55	63.0	34.1	17.4	8.75	44.55

TYPICAL THRUST BLOCKS

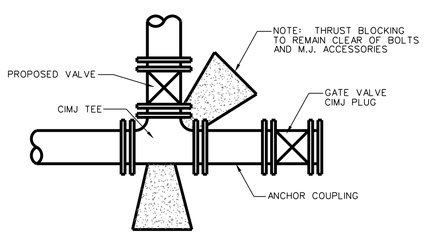

KEY BLOCK DETAIL

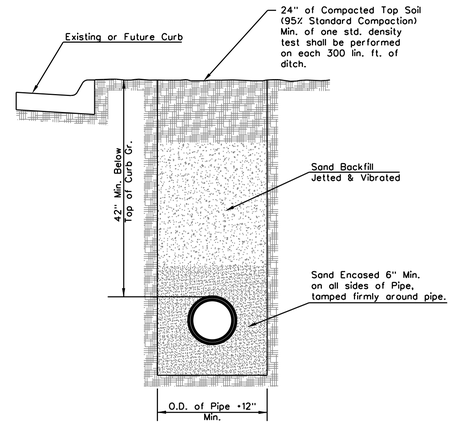

SETTLEMENT & COMPACTION ON CITY AND COUNTY ROAD RIGHT-OF-WAY EXCEPT UNDER PAVEMENT

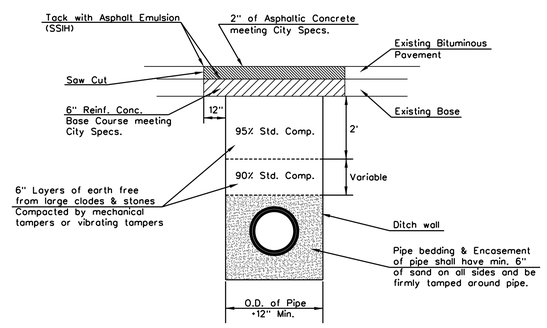

Standard Density Test, as described in the latest addition of ASTM D698, shall be performed to verify the above requirements to the Satisfaction of the Sedgwick County Director of Public Works. All testing cost shall be included in the unit price bid for the pipe in place.

When laying under paving, parallel with the centerline of the street, a minimum of one (1) Standard Density Test shall be performed on each 300 lineal feet of ditch.

PAVEMENT REPLACEMENT & DITCH COMPACTION UNDER EXISTING AND PROPOSED CITY ROADS

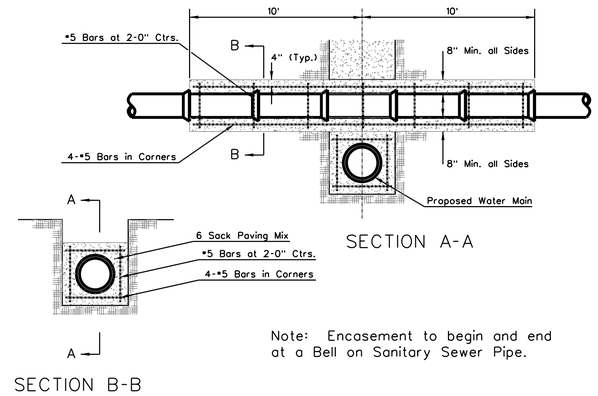

Note: Encasement to begin and end at a Bell on Sanitary Sewer Pipe.

REINFORCED CONCRETE ENCASEMENT OF SANITARY SEWER

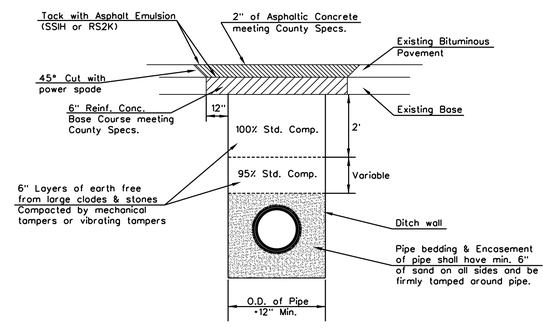

Standard Density Test, as described in the latest addition of ASTM D698, shall be performed to verify the above requirements to the Satisfaction of the Sedgwick County Director of Public Works. All testing cost shall be included in the unit price bid for the pipe in place.

When laying under paving, parallel with the centerline of the street, a minimum of one (1) Standard Density Test shall be performed on each 300 lineal feet of ditch.

PAVEMENT REPLACEMENT & DITCH COMPACTION UNDER EXISTING AND PROPOSED COUNTY ROADS

REVISED APR 97

CITY OF WICHITA PUBLIC WORKS ENGINEERING

VARIOUS WATER DETAILS

CITY ENGINEER
JAMES L. ARMOUR, P.E., L.S.
ACTING

PROJECT NUMBER	OCA NUMBER	DATE
XXX-XXXXX	XXXXXX	MM/YY

CITY ENGINEER'S OFFICE
CITY HALL - SEVENTH FLOOR
455 NORTH MAIN STREET
WICHITA, KANSAS 67202-1620
(316) 268-4501
(316) 268-4114 FAX

DESIGN	DRAWN
ABC	DEF

SHEET
X OF X

Ameritrack WEST
Ameritrack West, Inc.
12469 SW 15th
Benton, KS 67017
O: 316-778-2215
F: 316-778-1204

No.	Date	By	Approved	Revision

FIREPOINT ADDITION
WATER LINE
DETAILS
WICHITA, KANSAS
JAMES ARMOUR, P.E. - CITY ENGINEER
Project No. 448-94-170 OCA No. 135443

POE & ASSOCIATES OF KANSAS, INC.
CONSULTING ENGINEERS
5940 E. Central, Suite 200 ■ Wichita, KS 67208-4242
Phone 316/685-4114 ■ FAX 316/685-4444

FINAL

Designed By: BLB
Drawn By: ELS
Drawing: 463_PET7_Water Details4.dgn
Date: April 6, 2010

Sheet
7 of 14