STATE	PROJECT NO.	YEAR	SHEET NO.	TOTAL SHEETS
KANSAS	472-84071	2005	R1.29	

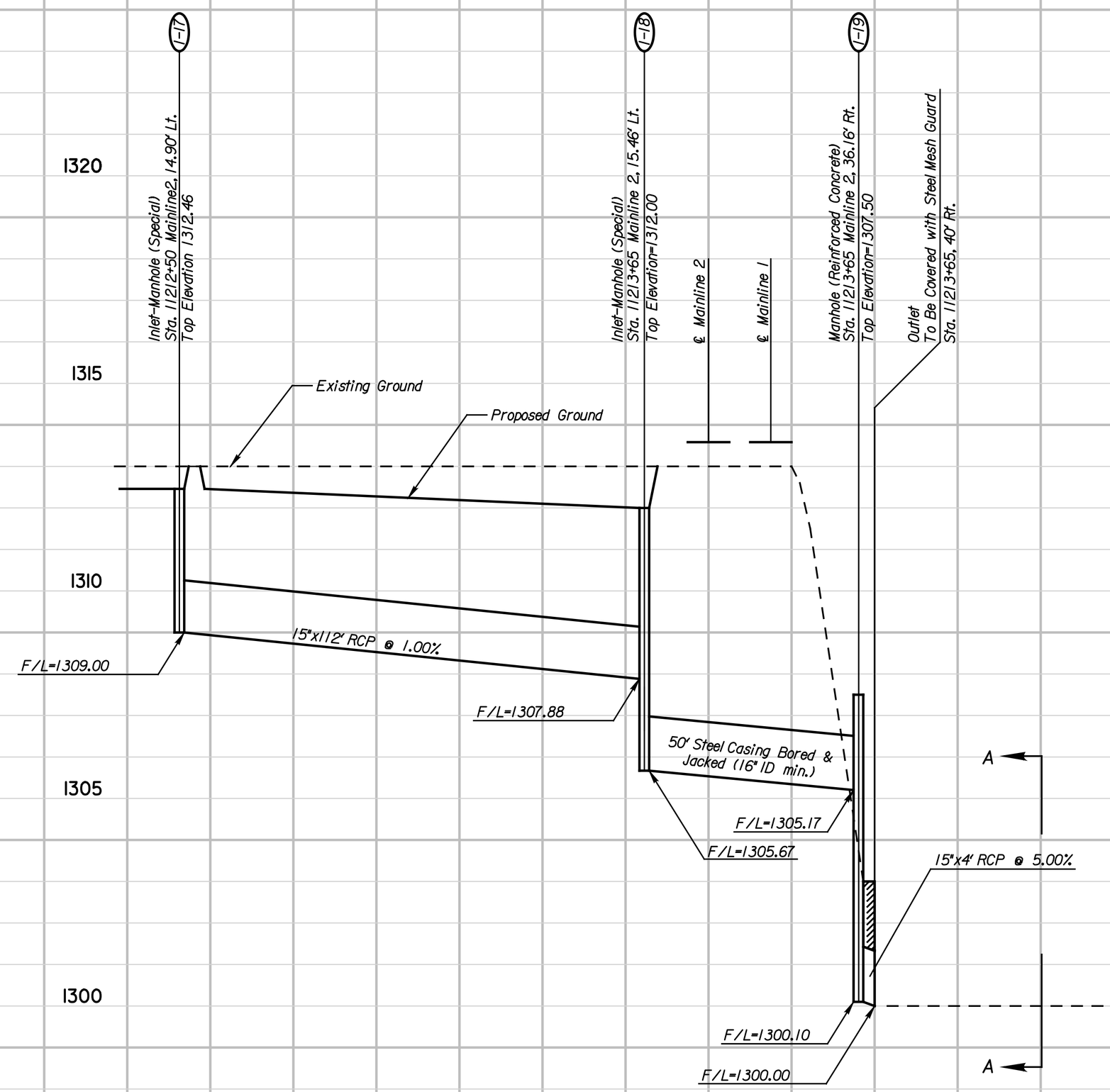

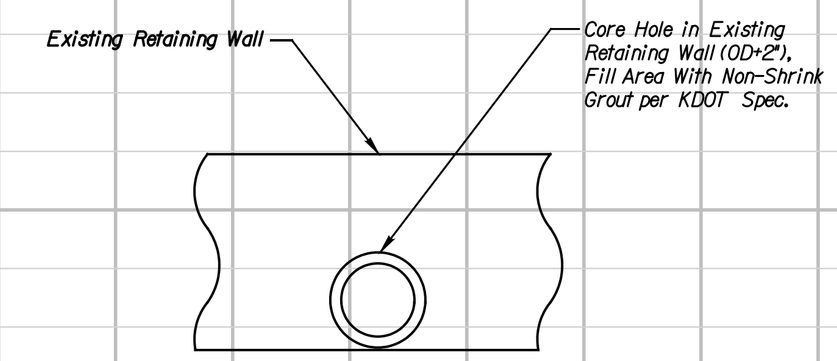

VIEW A-A

Scale: Hor. 1"=20'
Vert. 1"=2'

RR PHASE I DOUGLAS

DATE	BY

NO.	DATE	REVISIONS	BY	APP'D
3				
2				
1				

CITY OF WICHITA

WICHITA CENTRAL CORRIDOR

PHASE I- TRACK WORK
PIPE PROFILES

SHEET NO. OF	SCALE	APP'D	
DESIGNED	DETAILED	QUANTITIES	TRACED
DESIGN CK.	DETAIL CK.	QUAN.CK.	TRACE CK.

This sheet designed by:

HNTB
ARCHITECTS ENGINEERS PLANNERS

Plotted on: Tuesday, January 04, 2005 8:14:54 AM
JGraham Plot Queues: \\cbsw10\KC029049-PS
Plot Scale: 20.000000:0.000000 Pen Table: m:\jobs\29049\TechProd\Railroad\plots\fullsize.pen
Design Filename: M:\jobs\29049\TechProd\Drainage\Drawings\rr_culvert100.dgn