STATE	PROJECT NO.	YEAR	SHEET NO.	TOTAL SHEETS
KANSAS	472-84071	2005	B2.13	

NOTES:
Refer to Abutment No. 1 for Abutment Notes.

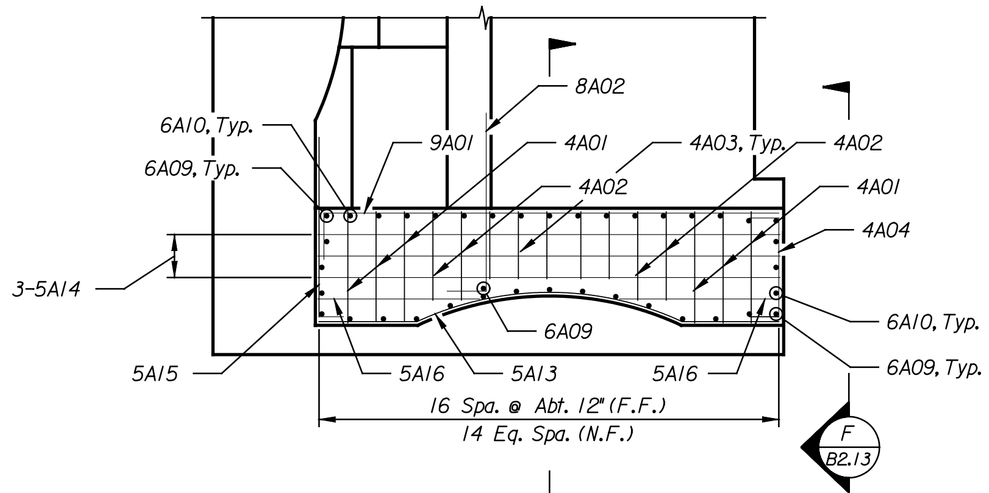

SECTION R B2.13
Scale: 1/4" = 1'-0"

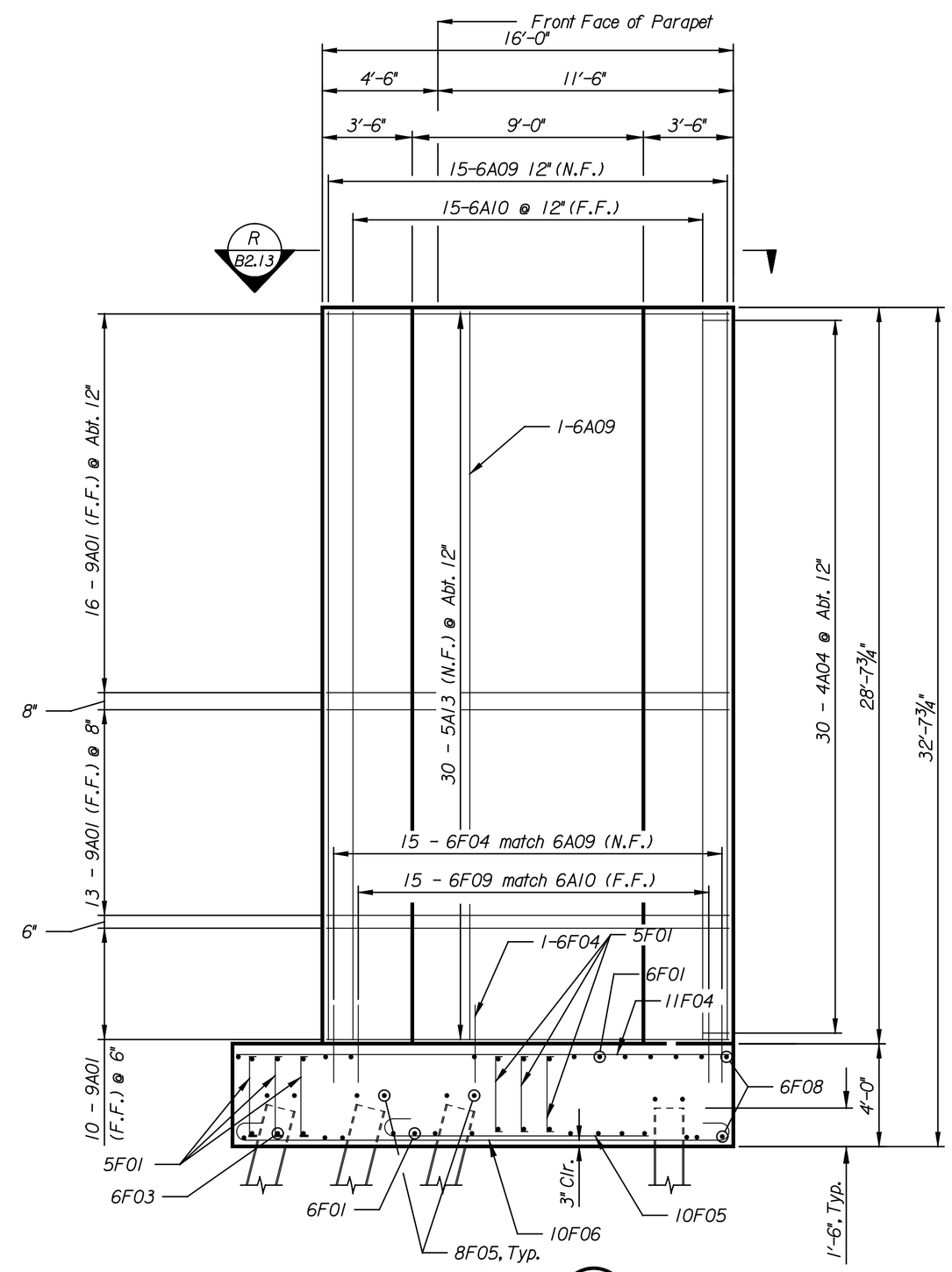

VIEW D B2.9
Scale: 1/4" = 1'-0"

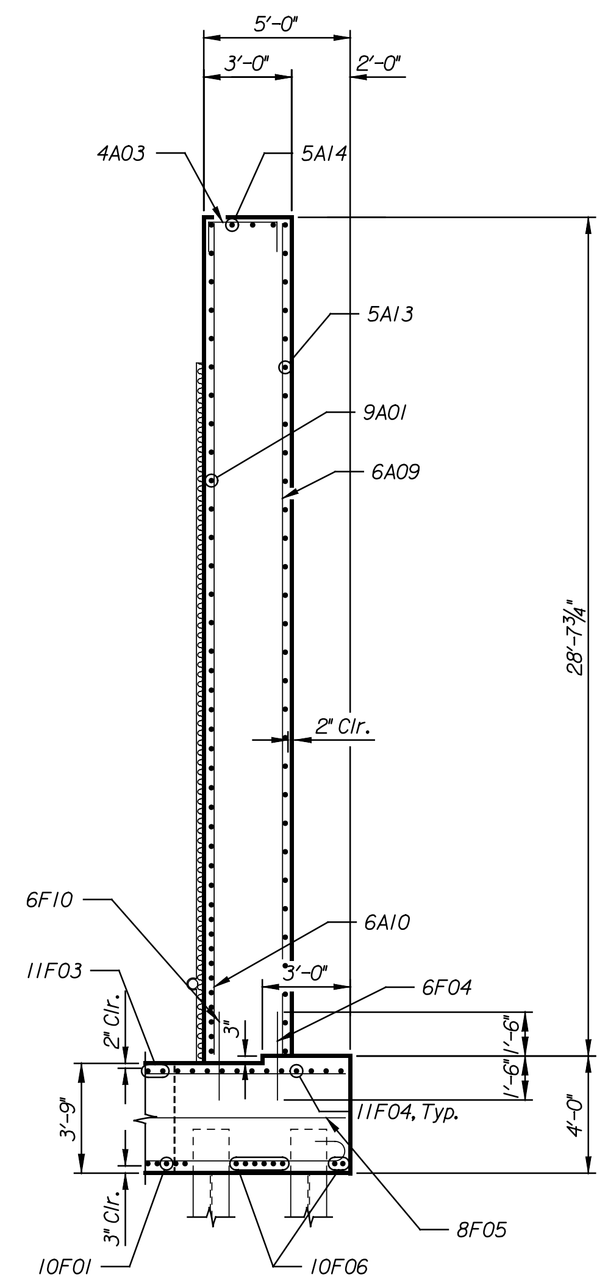

SECTION E B2.13
Scale: 1/4" = 1'-0"

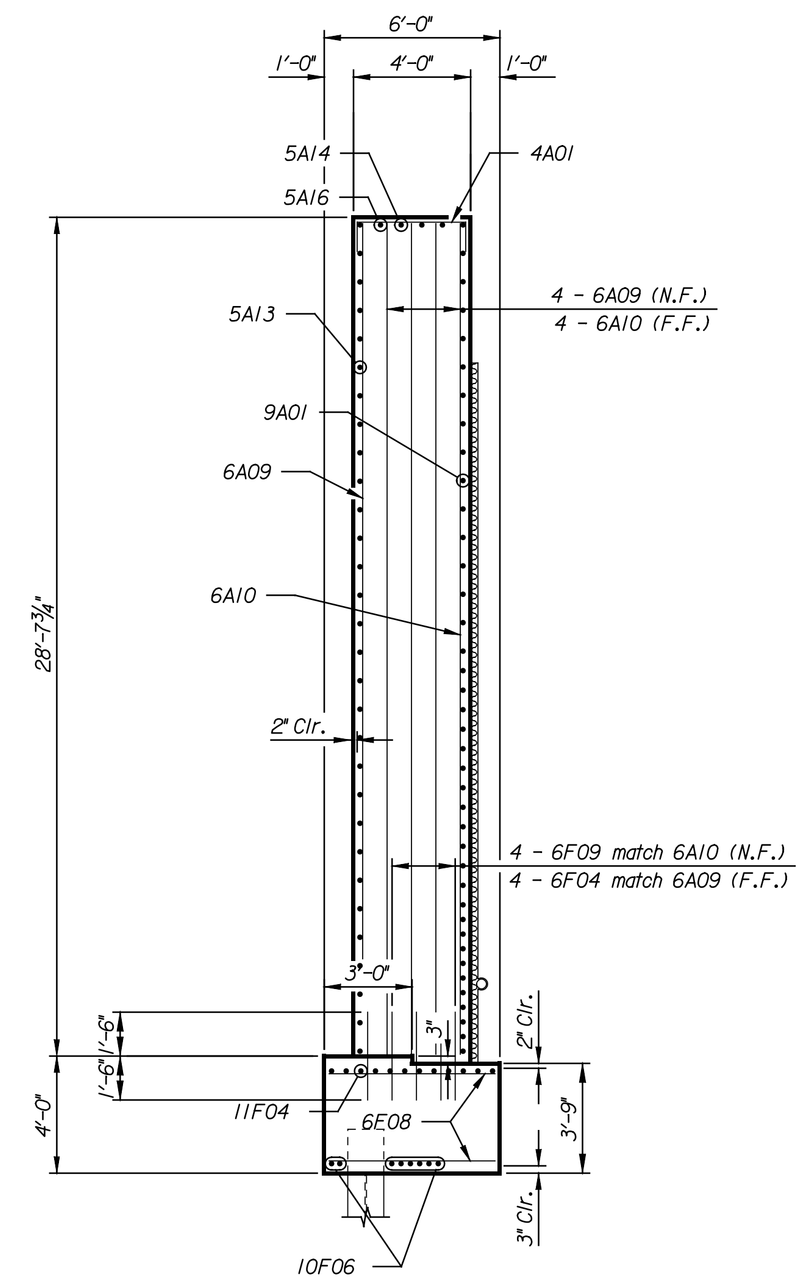

VIEW F B2.13
Scale: 1/4" = 1'-0"

DATE	BY

NO.	DATE	REVISIONS	BY	APP'D
3				
2				
1				

CITY OF WICHITA

WICHITA CENTRAL CORRIDOR

13TH STREET
ABUTMENT NO. 2 WINGWALL ELEVATION & DETAILS

This sheet designed by:

HNTB
ARCHITECTS ENGINEERS PLANNERS

LOCATION: BNSF BR. 210.8 WICHITA, KS LINE SEGMENT 7400

SHEET NO.	OF	SCALE AS NOTED	APP'D				
DESIGNED	FKD	DETAILED	DAL	QUANTITIES	DJJ	TRACED	DJJ
DESIGN CK.	DMH	DETAIL CK.	EDY	QUAN.CK.	DMH	TRACE CK.	DMH

Plotted on: 04-JAN-2005 13:01 $time$
djamison Plot Queue: $queue$
Plot Scale: $scale$ Pen Table: $pentable$
Design Filename: K:\b280401\Bridges\Dec2004\Base Bid\13thStreet\drawings\111.dgn.