STATE	PROJECT NO.	YEAR	SHEET NO.	TOTAL SHEETS
KANSAS	472-84071	2005	B3.17	

NOTES:
Refer the to Expansion Bearings for additional notes.

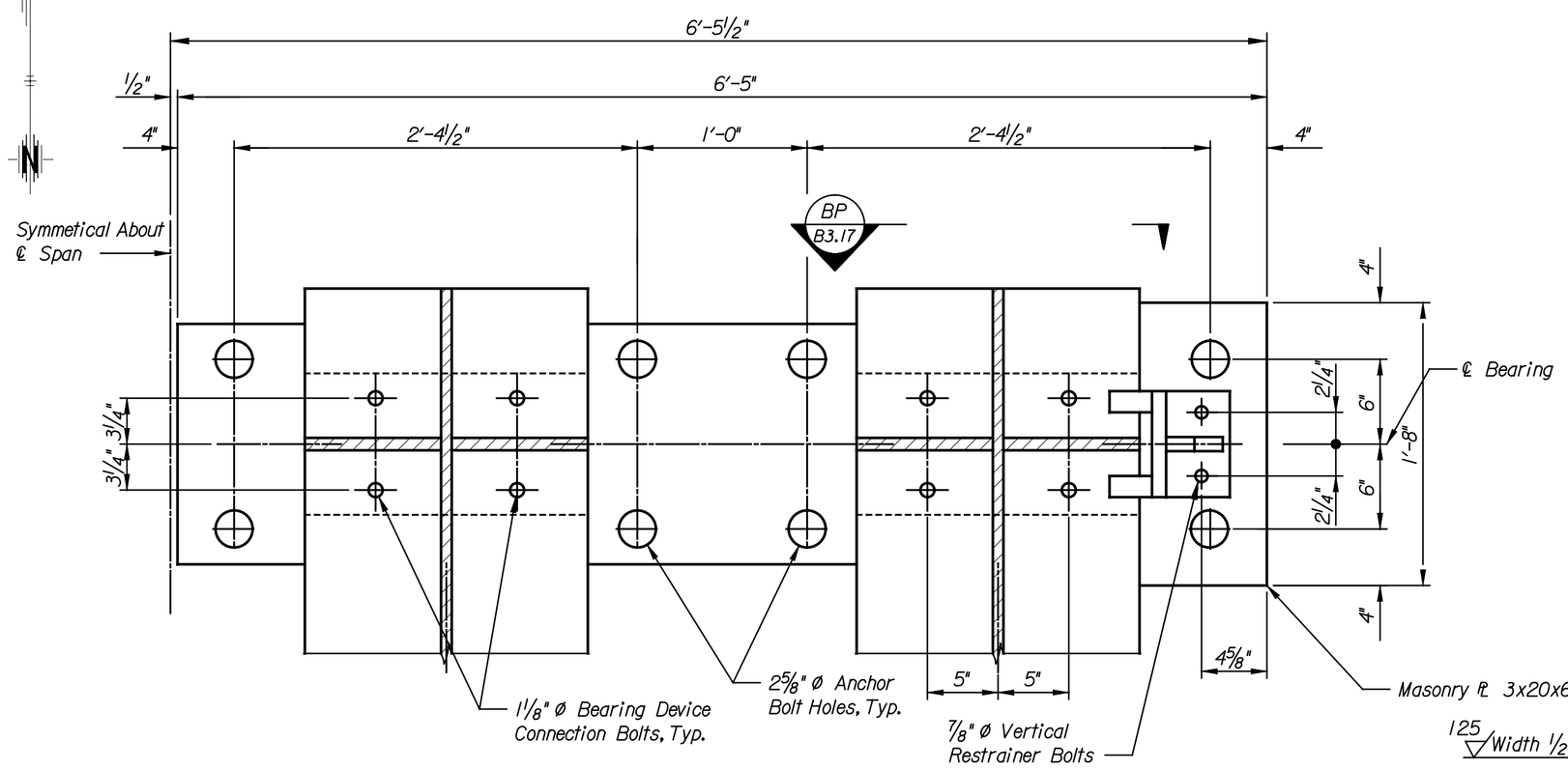

FIXED BEARING PLAN
Scale: 1½" = 1'-0"

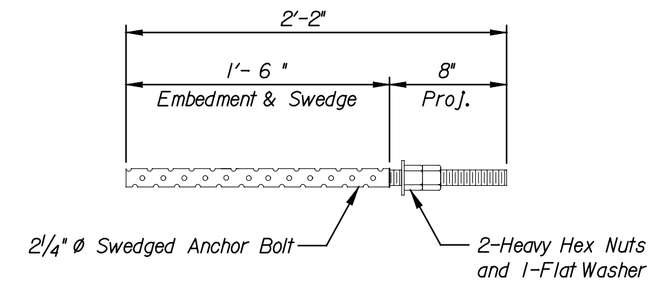

ANCHOR BOLT DETAIL
Scale: 1½" = 1'-0"

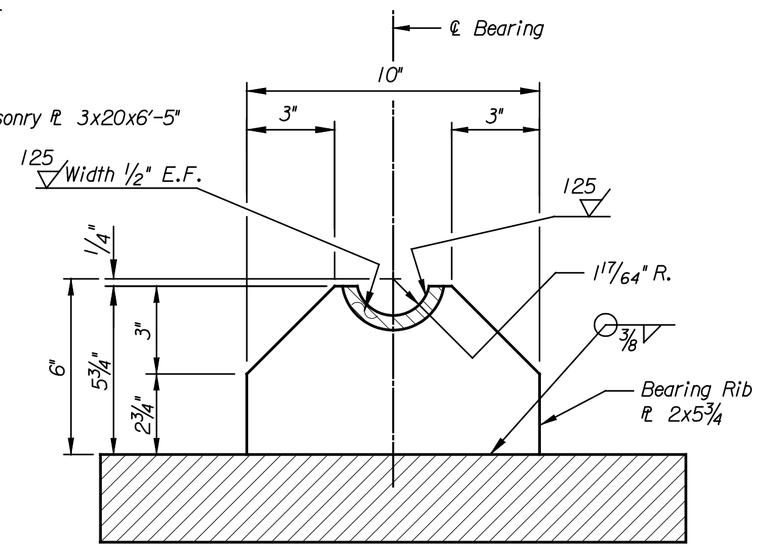

DETAIL BQ
Scale: 3" = 1'-0" (B3.17)

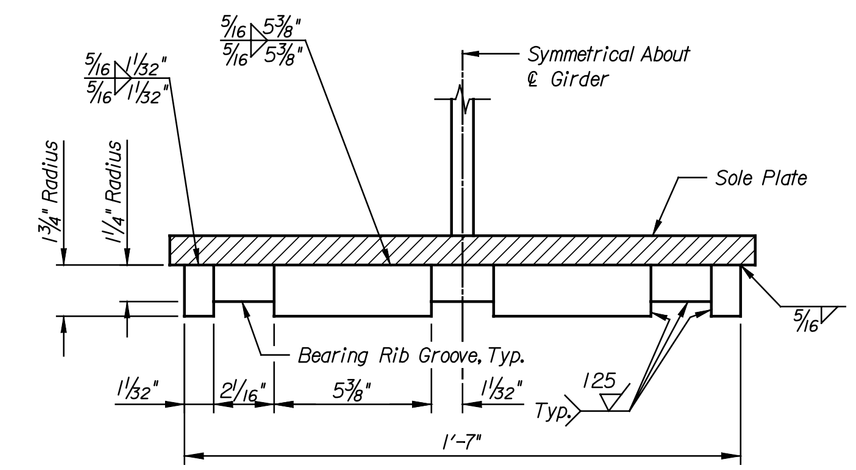

DETAIL BP
Scale: 3" = 1'-0" (B3.17)

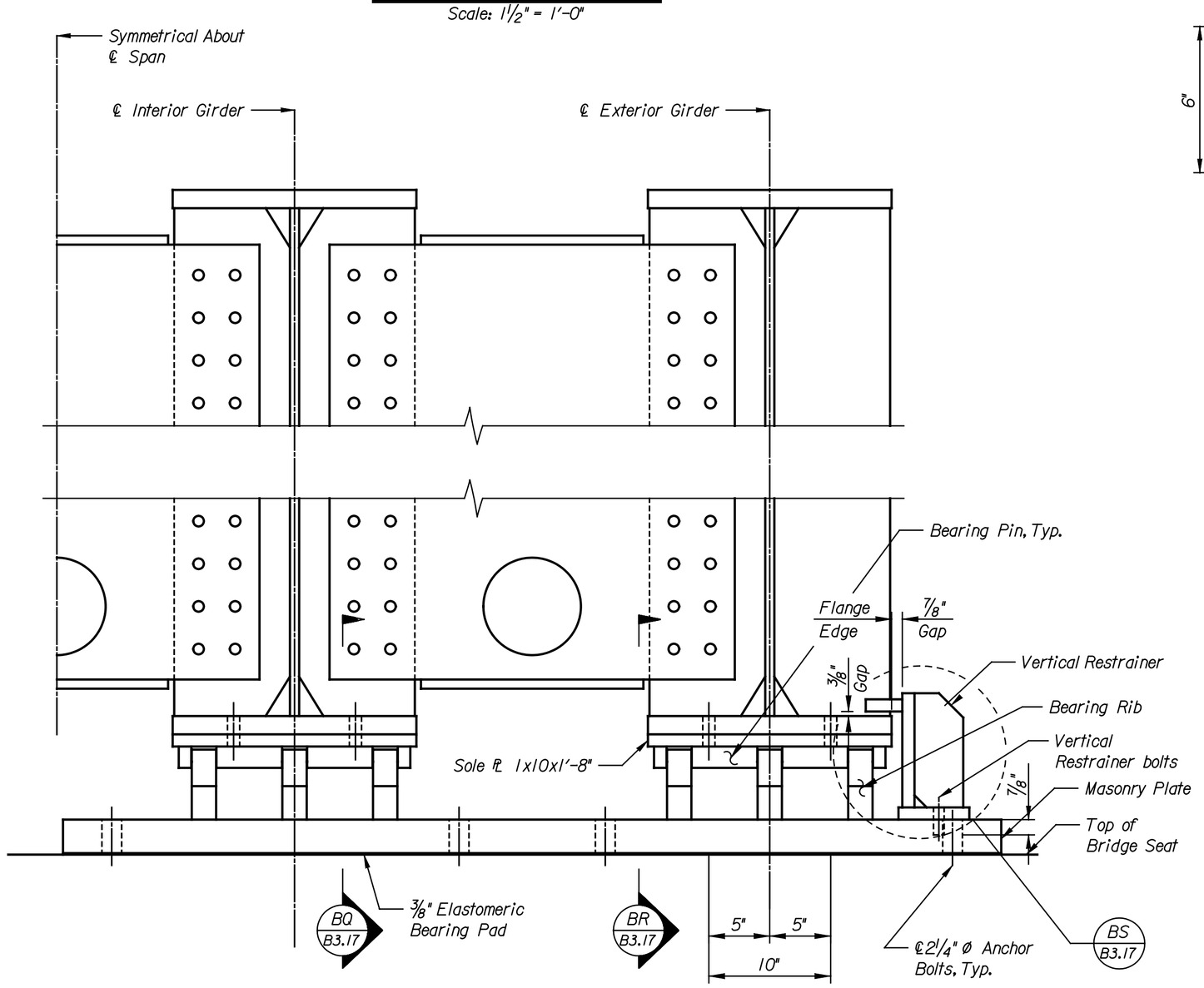

FIXED BEARING ELEVATION
Scale: 1½" = 1'-0"

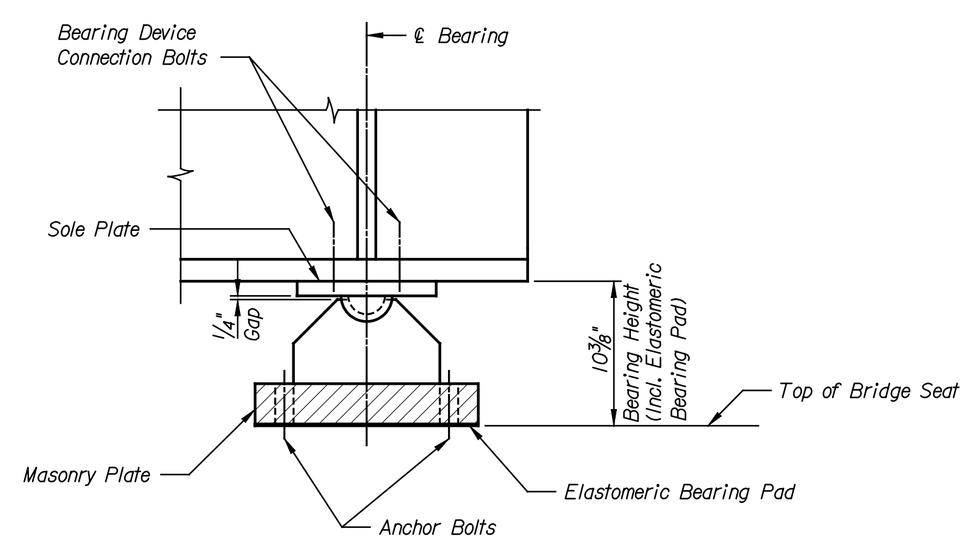

SECTION BR
Scale: 1½" = 1'-0" (B3.17)

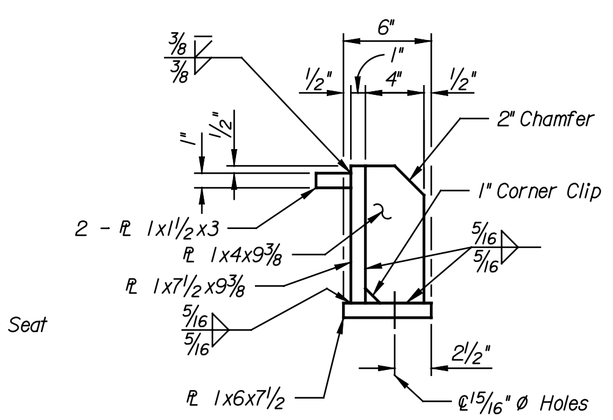

DETAIL BS
Scale: 1½" = 1'-0" (B3.17)

NO.	DATE	REVISIONS	BY	APP'D
3				
2				
1				

CITY OF WICHITA
WICHITA CENTRAL CORRIDOR
MURDOCK
FIXED BEARING DEVICE DETAILS

SHEET NO.	OF	SCALE AS NOTED	APP'D				
DESIGNED	CAP	DETAILED	DJJ	QUANTITIES	DJJ	TRACED	DJJ
DESIGN CK.	SAS	DETAIL CK.	EDY	QUAN.CK.	DMH	TRACE CK.	DMH

LOCATION: BNSF BR. 21L5 WICHITA, KS LINE SEGMENT 7400

This sheet designed by:

HNTB
ARCHITECTS ENGINEERS PLANNERS

DATE	BY

Plotted on: 04-JAN-2005 13:08 $time$
djamison Plot Queue: $queue$
Plot Scale: $scale$ Pen Table: $pentable$
Design Filename: k:\b29049\Bridges\Dec2004\Base Bid\Murdock\drawings\mf6.dgn