STATE	PROJECT NO.	YEAR	SHEET NO.	TOTAL SHEETS
KANSAS	472-84071	2005	B3.24	

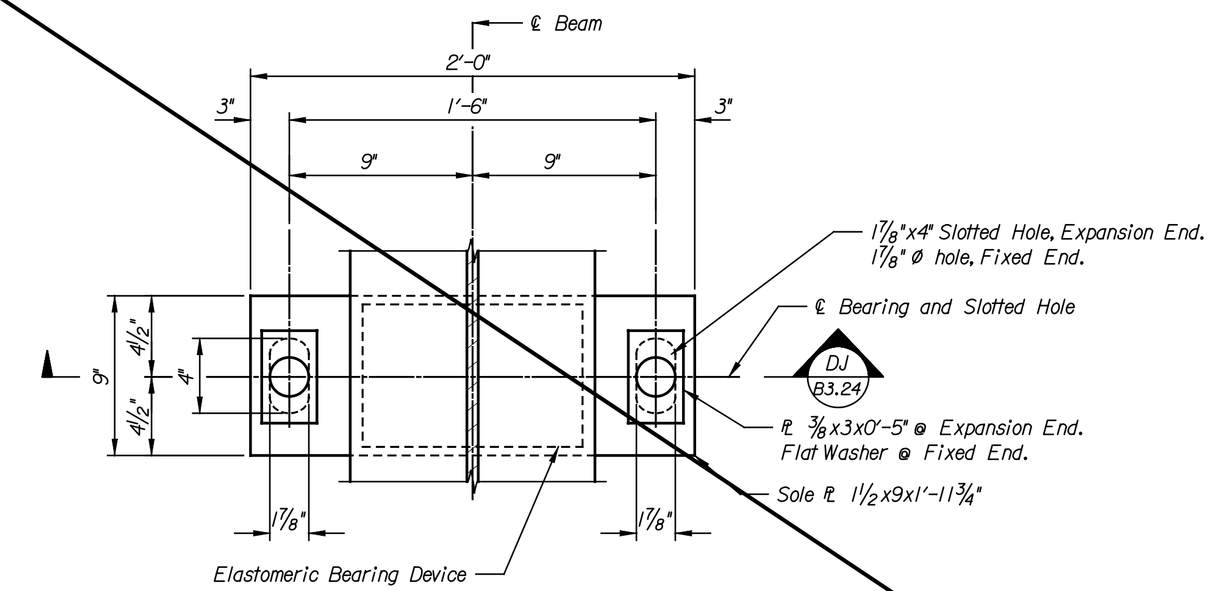

SECTION DH B3.23
Not To Scale

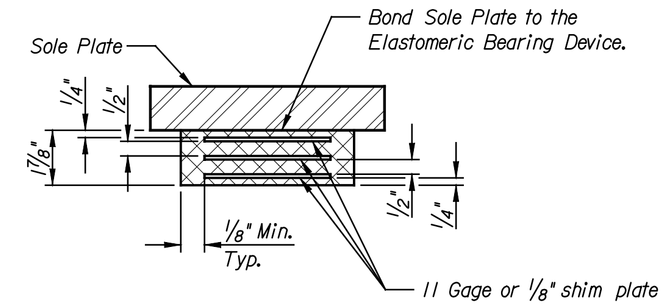

ELASTOMERIC BEARING DEVICE
Not To Scale

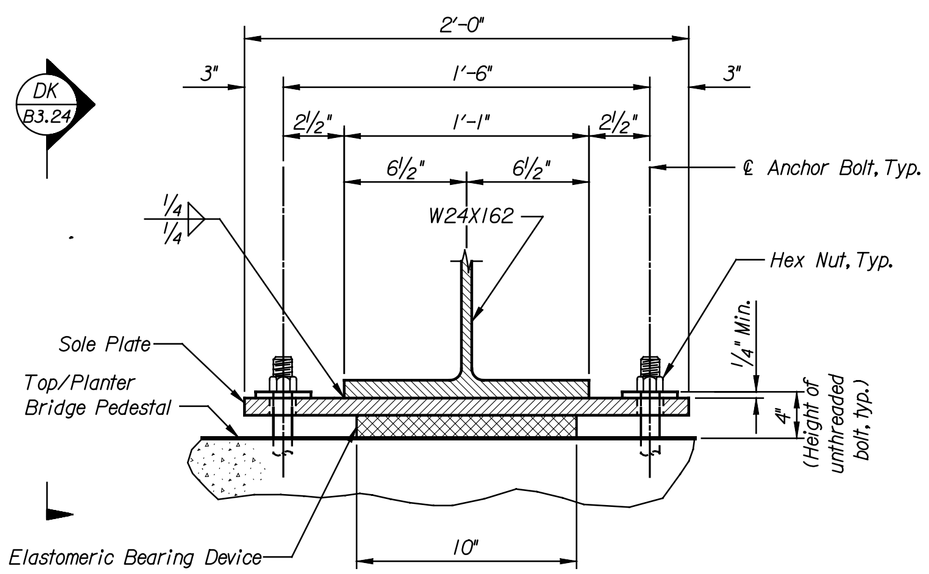

SECTION DJ B3.24
Not To Scale

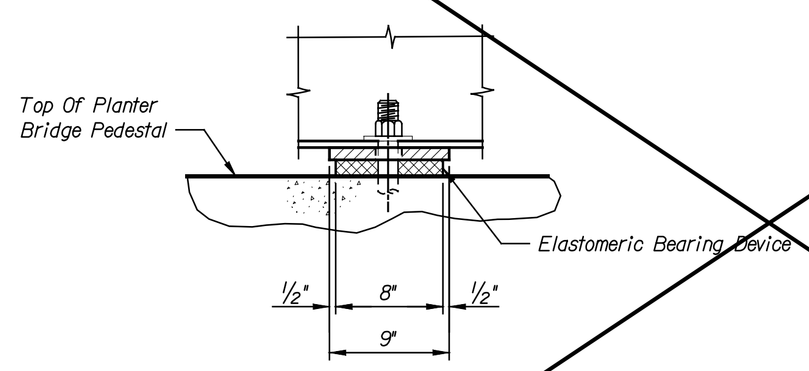

SECTION DK B3.24
Not To Scale

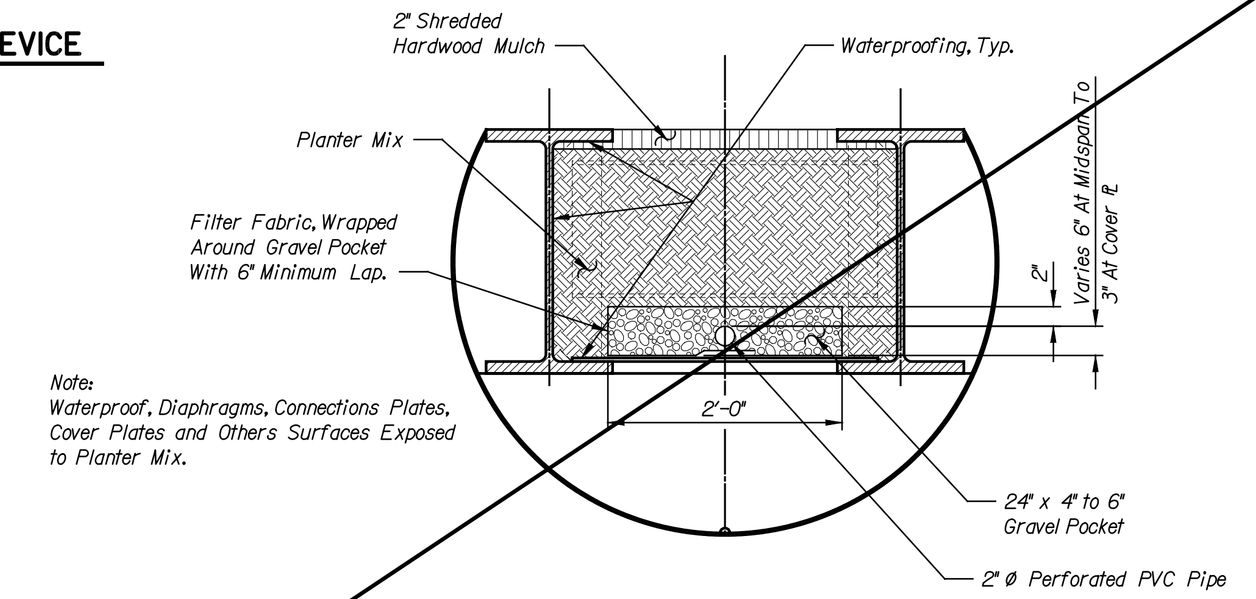

Note:
Waterproof, Diaphragms, Connections Plates, Cover Plates and Others Surfaces Exposed to Planter Mix.

SECTION DG B3.23
Scale: 1" = 1'-0"

NOTES:
Anchor bolts for the expansion end shall be of the size shown and composed of steel conforming to ASTM F1554, Grade 105, Class 1A or 2A, with Supplementary Requirement S3; each with one rectangular plate washer of the size shown; and one Heavy Hex Nut ASTM A563, Grade DH.

All holes for anchor bolts will be 3/8" larger than the nominal anchor bolt diameter, unless noted otherwise.

All holes through main structural members shall be drilled full-size or shall be sub-drilled 1/4" less than full diameter and reamed to full-size.

All washers shall be located under the turned element.

The materials, fabrication and installation of the Elastomeric Bearing Devices shall conform to the specifications.

The elastomeric bearing devices shall be bonded to the sole plate by vulcanization.

The waterproofing for the interior of the planter bridge shall consist of a 0.100-inch thick cold, spray-applied waterproofing membrane applied to all surfaces in contact with the planter mix, as indicated in the plans and specifications.

The underdrain for the planter bridge shall consist of a geocomposite drain; perforated and non-perforated PVC pipe, Schedule 40, with fittings; and clean gravel fill conforming to the specifications.

The planter mix shall be as specified on the Planting Plans, Planting Details and Specifications.

Refer to Planter Bridge Details 1 for additional notes.

REFERENCES:
Anchor Bolt Layout, Refer to B3.5.
Irrigation Plan, Refer to L3.09.
Planting Plan, Refer to L2.09

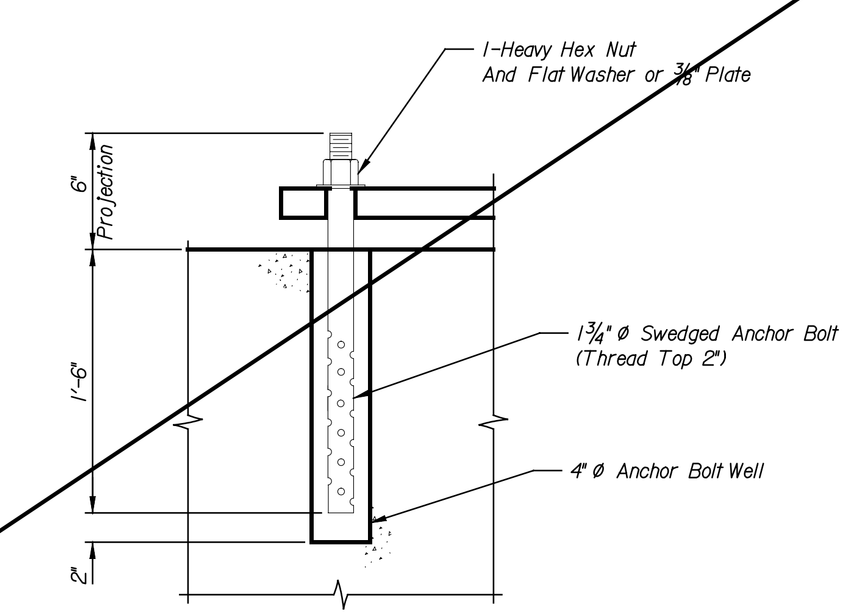

ANCHOR BOLT WELL DETAIL
Scale: 1 1/2"=1'-0"

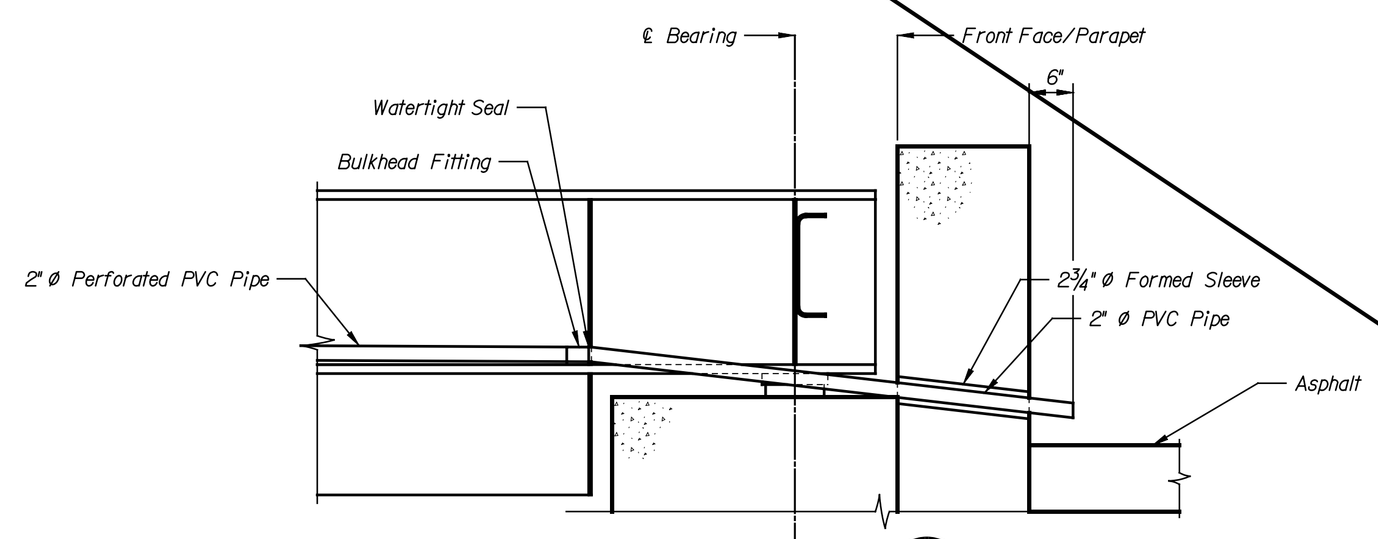

SECTION DL B3.23
Scale: 1/4" = 1'-0"
Scale: 3/4" = 1'-0"
Hardwood Mulch, Planter Mix, Filter Fabric, and Gravel Pocket Not Shown For Clarity.

NO.	DATE	REVISIONS	BY	APP'D
3				
2				
1				

DATE	BY

This sheet designed by:
HNTB
ARCHITECTS ENGINEERS PLANNERS

LOCATION: BNSF BR. 21L5 WICHITA, KS LINE SEGMENT 7400

CITY OF WICHITA
WICHITA CENTRAL CORRIDOR
MURDOCK
PLANTER BRIDGE DETAILS II

SHEET NO.	OF	SCALE AS NOTED	APP'D				
DESIGNED	FKD	DETAILED	DJJ	QUANTITIES	DJJ	TRACED	DJJ
DESIGN CK.	DMH	DETAIL CK.	EDY	QUAN.CK.	DMH	TRACE CK.	DMH

Plotted on: 04-JAN-2005 13:09 $time$
djamison Plot Queue: $queue$
Plot Scale: $scale$ Pen Table: $pentable$
Design Filename: k:\b29049\Bridges\Dec2004\Base Bld\Murdock\drawings\mi3c.dgn