STATE	PROJECT NO.	YEAR	SHEET NO.	TOTAL SHEETS
KANSAS	472-84071	2005	B4.5	

NOTES:
Anchor bolt holes shall be pre-formed with roughened inside surfaces. The method of pre-forming shall be submitted to the Engineer for approval.

The anchor bolt holes shall be sealed to prevent accumulation of water in the holes prior to anchor bolt installation and grouting.

The anchor bolt holes shall be free of water or other foreign materials at the time of grouting.

REFERENCES:
Expansion Bearings, Refer to B4.16.
Fixed Bearings, Refer to B4.17.
Collision Beam Details, Refer to B4.25.

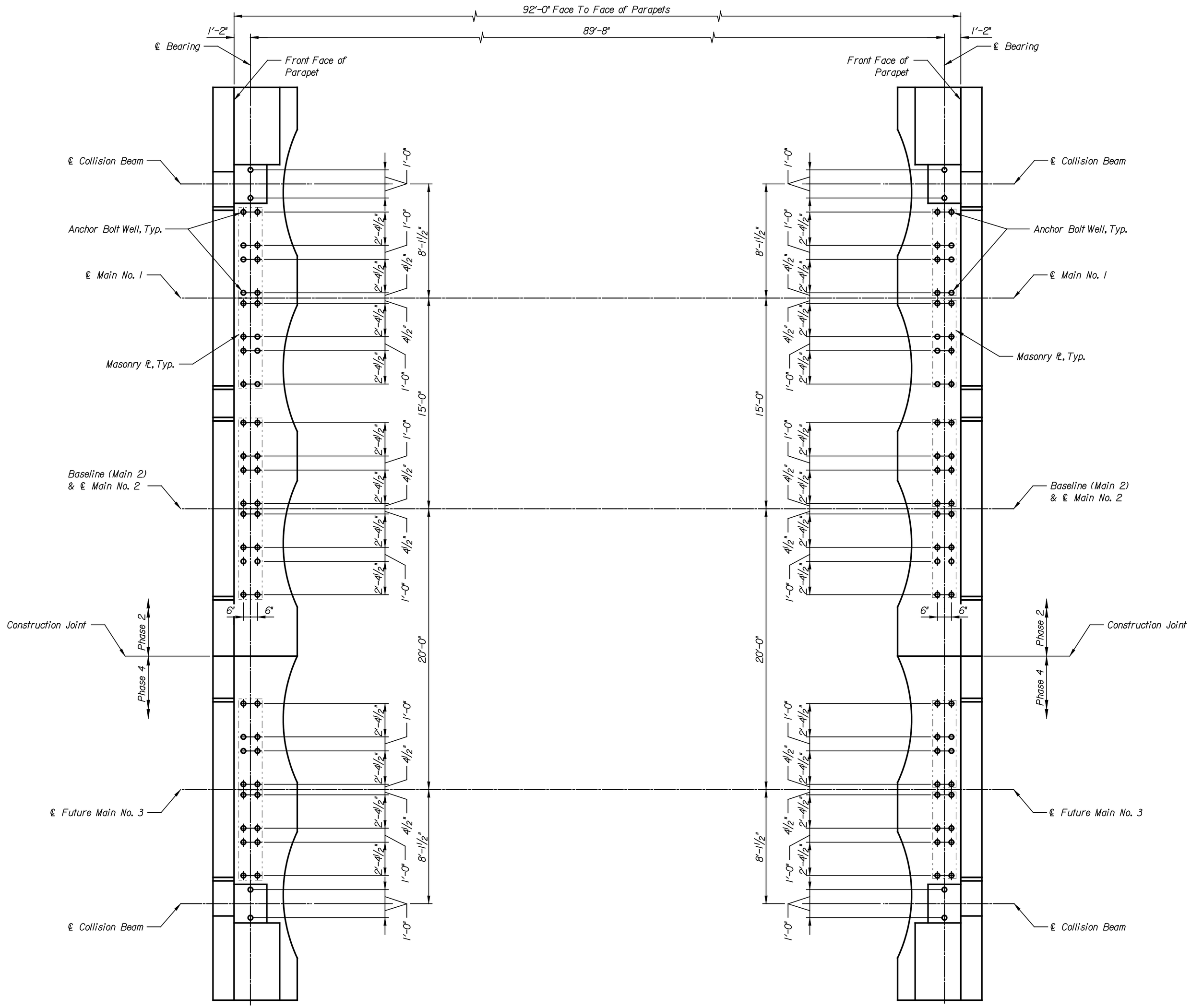

ANCHOR BOLT LAYOUT
Scale: 1/4" = 1'-0"

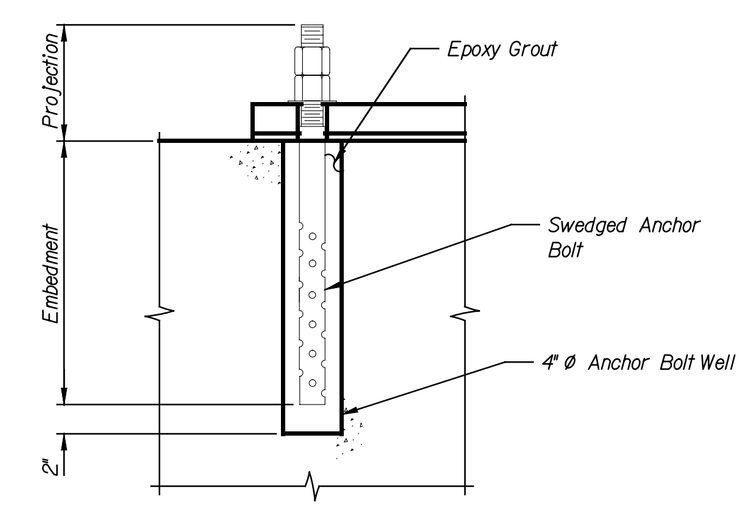

ANCHOR BOLT WELL DETAIL
Scale: 1½"=1'-0"

NO.	DATE	REVISIONS	BY	APP'D
3				
2				
1				

CITY OF WICHITA
WICHITA CENTRAL CORRIDOR
CENTRAL
ANCHOR BOLT LAYOUT

SHEET NO.	OF	SCALE AS NOTED	APP'D				
DESIGNED	CAP	DETAILED	BLW	QUANTITIES	DJJ	TRACED	DJJ
DESIGN CK.	SAS	DETAIL CK.	JWH	QUAN.CK.	DMH	TRACE CK.	DMH

LOCATION: BNSF BR. 21L8 WICHITA, KS LINE SEGMENT 7400

This sheet designed by:
HNTB
ARCHITECTS ENGINEERS PLANNERS

DATE	BY

Plotted on: 04-JAN-2005 13:11 $time$
djamison Plot Queue: $queue$
Plot Scale: $scale$ Pen Table: $pentable$
Design Filename: K:\b29049\bridges\Dec2004\Base Bid\Central\drawings\cl6a.dgn.