STATE	PROJECT NO.	YEAR	SHEET NO.	TOTAL SHEETS
KANSAS	472-84071	2005	B4.19	

DATE	BY

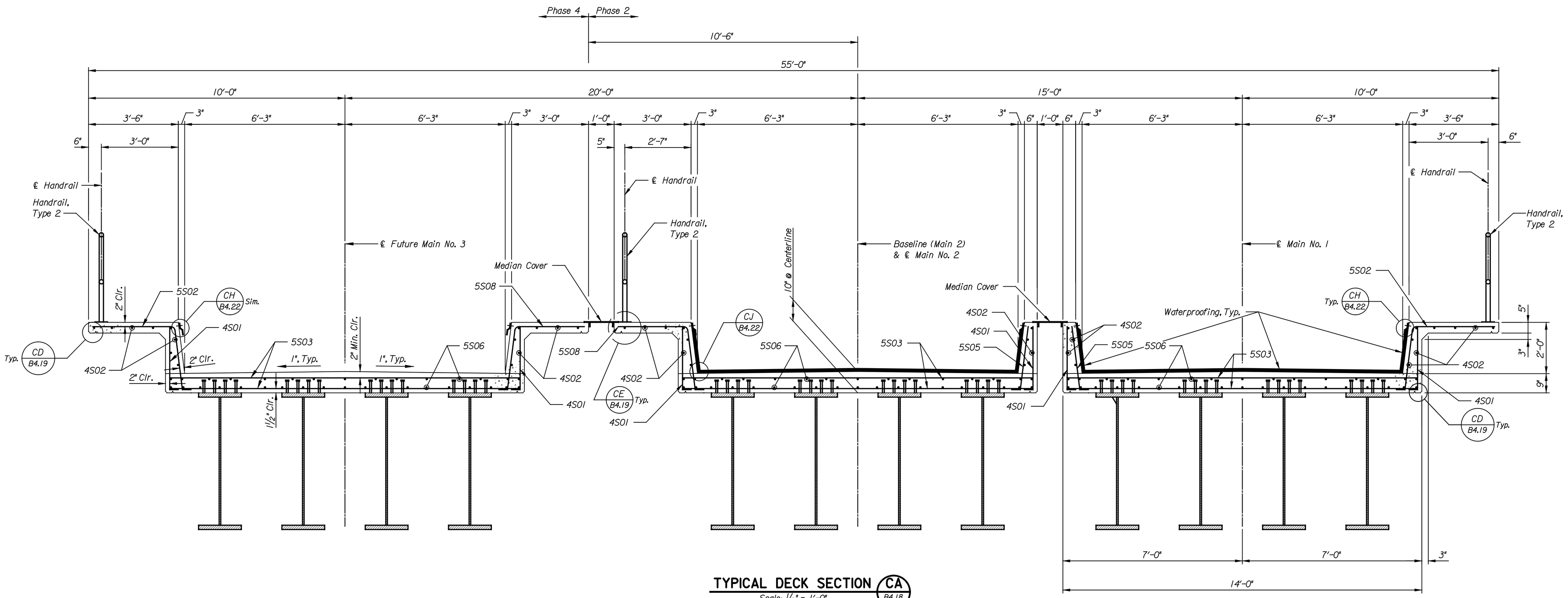

TYPICAL DECK SECTION CA B4.18

Scale: 1/2" = 1'-0"

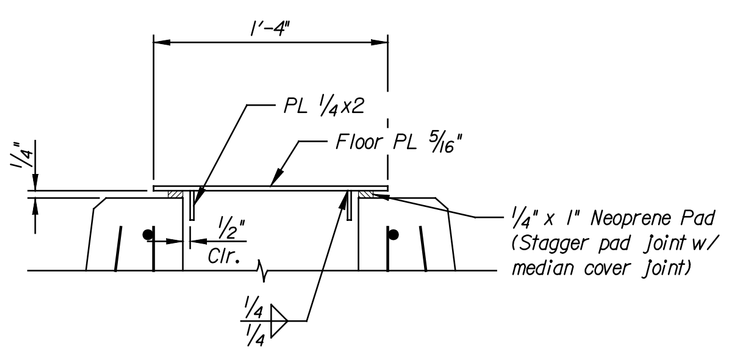

SECTION CB B4.18

Scale: 1½" = 1'-0"

Note:
Minimum Length of Median Cover Plate, 5'-0"
Maximum Length of Median Cover Plate, 8'-0"

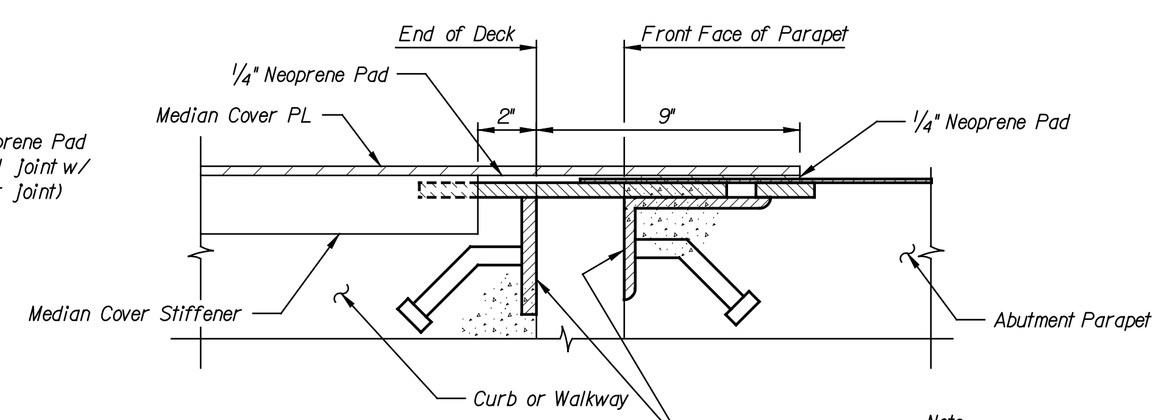

SECTION CC B4.18

Scale: 3" = 1'-0"

Note:
Neoprene Pad is subsidiary to deck.

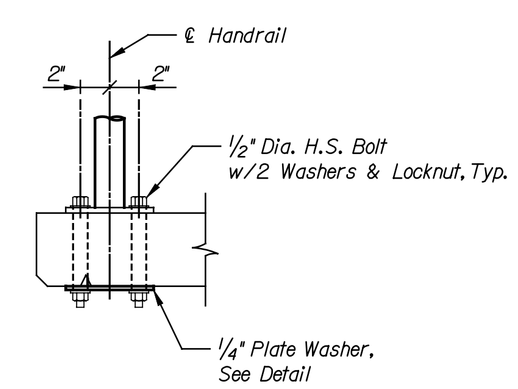

DETAIL CE B4.19

Scale: 1½" = 1'-0"

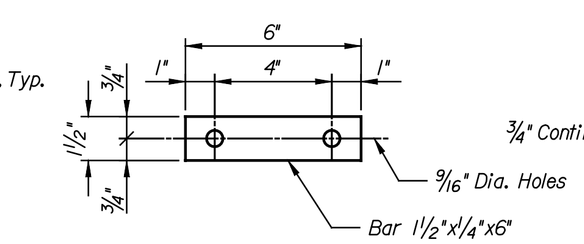

PLATE WASHER DETAIL

Scale: 3" = 1'-0"
Galvanize After Fabrication

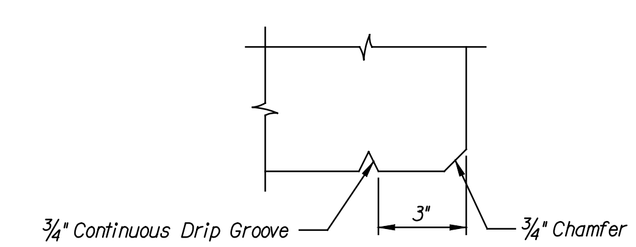

DETAIL CD B4.19

Scale: 3" = 1'-0"

NO.	DATE	REVISIONS	BY	APP'D
3				
2				
1				

CITY OF WICHITA

WICHITA CENTRAL CORRIDOR

CENTRAL DECK SECTION & DETAILS

This sheet designed by:

HNTB
ARCHITECTS ENGINEERS PLANNERS

LOCATION:
BNSF BR. 21.8 LINE SEGMENT 7400
WICHITA, KS

SHEET NO.	OF	SCALE AS NOTED	APP'D		
DESIGNED	FKD	DETAILED	DJJ	QUANTITIES	DJJ	TRACED	DJJ
DESIGN CK.	DMH	DETAIL CK.	JWH	QUAN.CK.	DMH	TRACE CK.	DMH

Plotted on: 04-JAN-2005 13:14 $time$
djamison Plot Queue: $queue$
Plot Scale: $scale$ Pen Table: $pentable$
Design Filename: k:\b28049\bridges\Dec2004\Base Bid\Central\drawings\cl8.dgn