STATE	PROJECT NO.	YEAR	SHEET NO.	TOTAL SHEETS
KANSAS	472-84071	2005	B5.7	

NOTES:
Collision beam pedestal reinforcing not shown for clarity.

REFERENCES:
Collision beam pedestal, Refer to B5.13.

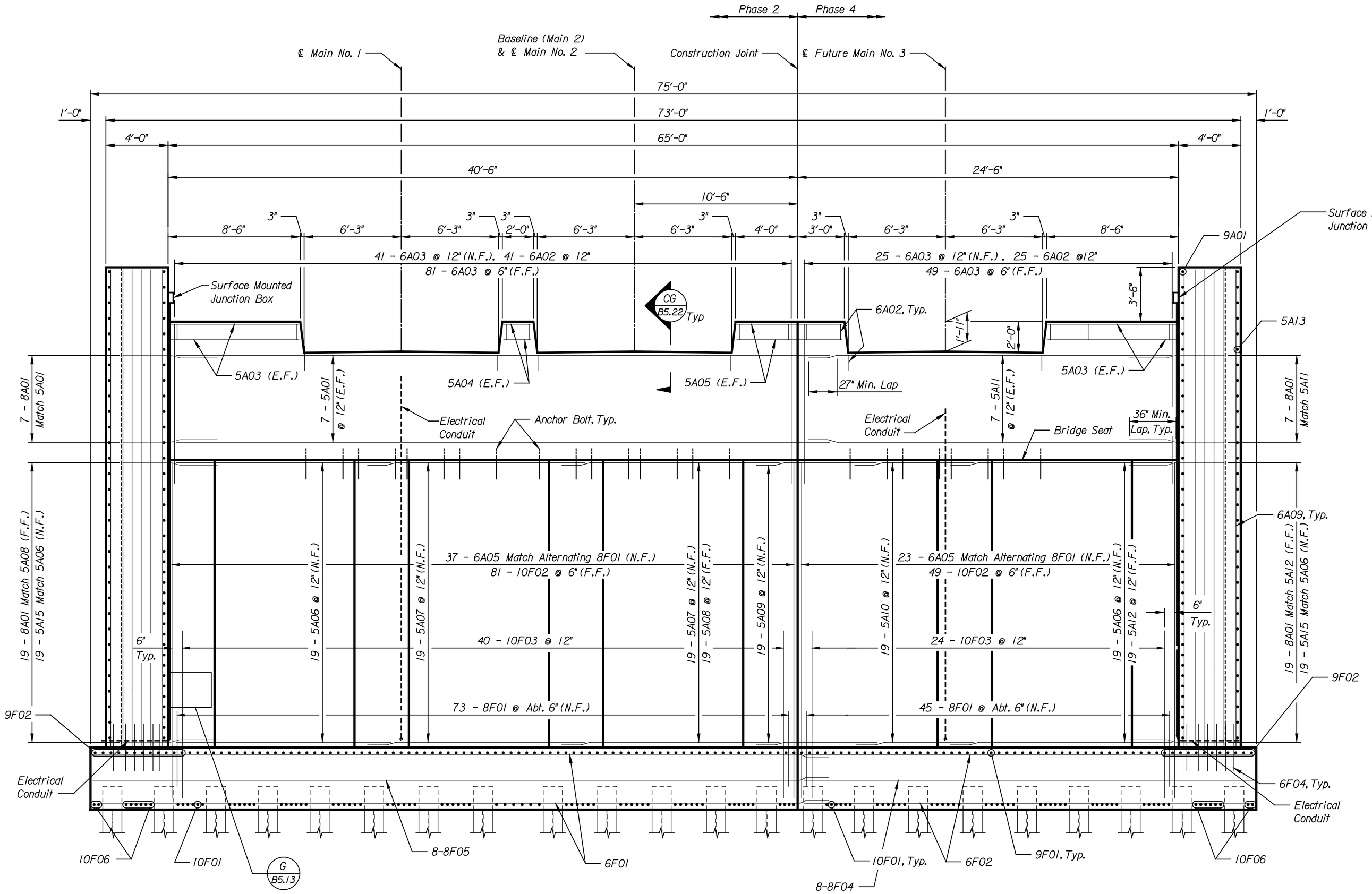

ELEVATION
Scale: 1/4" = 1'-0"

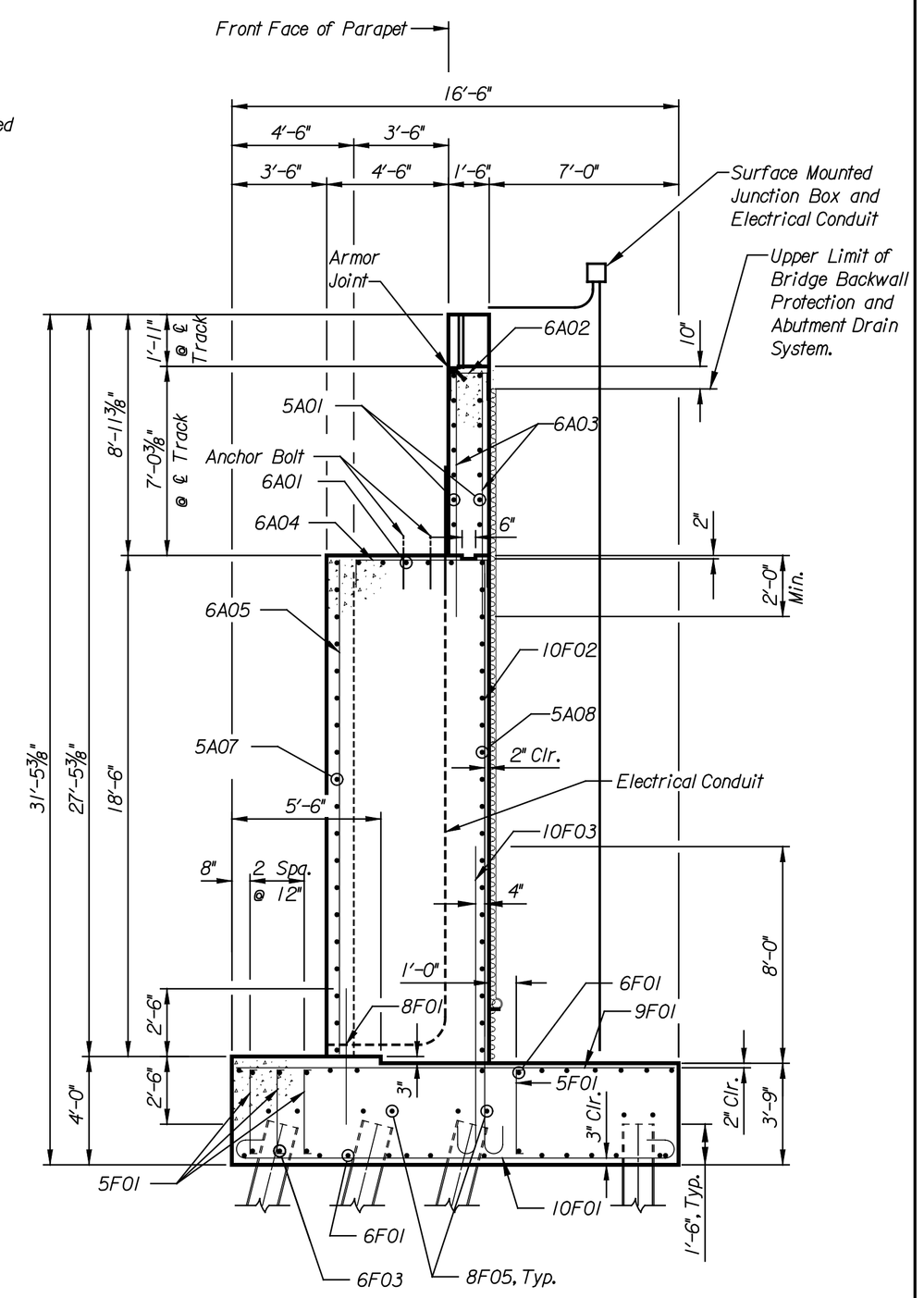

SECTION A
Scale: 1/4" = 1'-0" B5.6

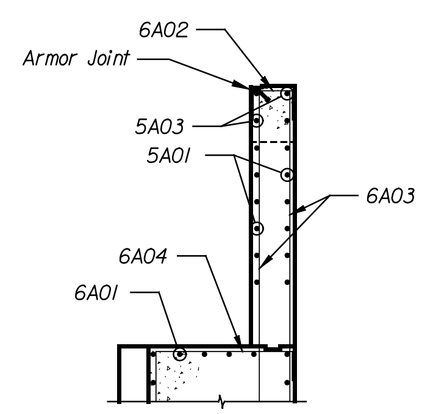

SECTION B
Scale: 1/4" = 1'-0" B5.6

NO.	DATE	REVISIONS	BY	APP'D
3				
2				
1				

CITY OF WICHITA

WICHITA CENTRAL CORRIDOR

2ND STREET
ABUTMENT NO. 1 ELEVATION & DETAILS

SHEET NO.	OF	SCALE AS NOTED	APP'D		
DESIGNED	FKD	DETAILED FWG	QUANTITIES	DJJ	TRACED DJJ
DESIGN CK.	DMH	DETAIL CK. JWH	QUAN.CK.	DMH	TRACE CK. DMH

LOCATION: BNSF BR. 212.0 WICHITA, KS LINE SEGMENT 7400

This sheet designed by:

HNTB
ARCHITECTS ENGINEERS PLANNERS

DATE	BY

Plotted on: 06-JAN-2005 14:59 $time$
scindrell Plot Queue: $queue$
Plot Scale: $scale$ Pen Table: $pentable$
Design Filename: k:\b280419\Bridges\Dec2004\Base Bid\02nd5treet\drawings\sl09a.dgn