STATE	PROJECT NO.	YEAR	SHEET NO.	TOTAL SHEETS
KANSAS	472-84071	2005	B5.12	

NOTES:
Refer to Abutment No. 1 for Abutment Notes.

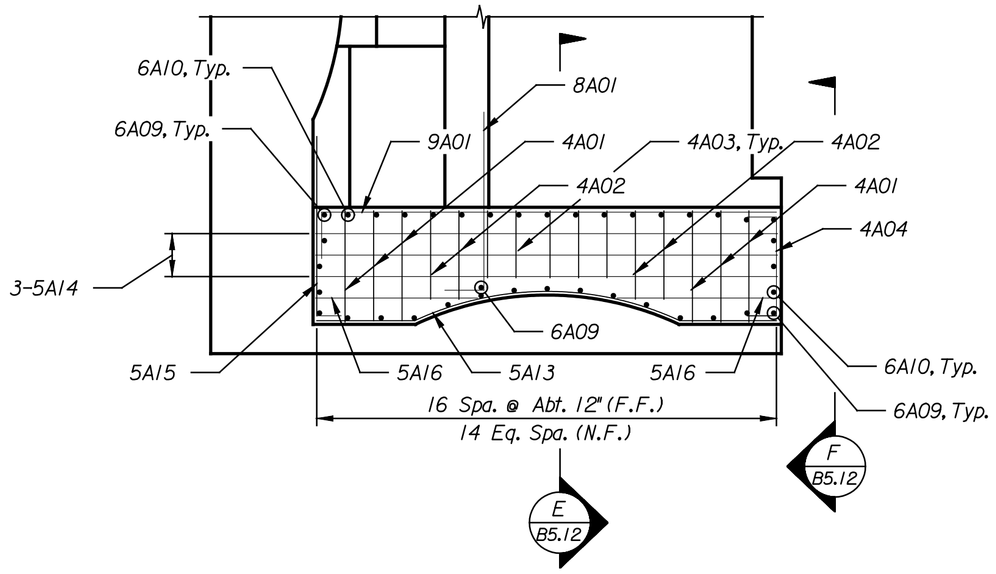

SECTION P
Scale: 1/4" = 1'-0" B5.12

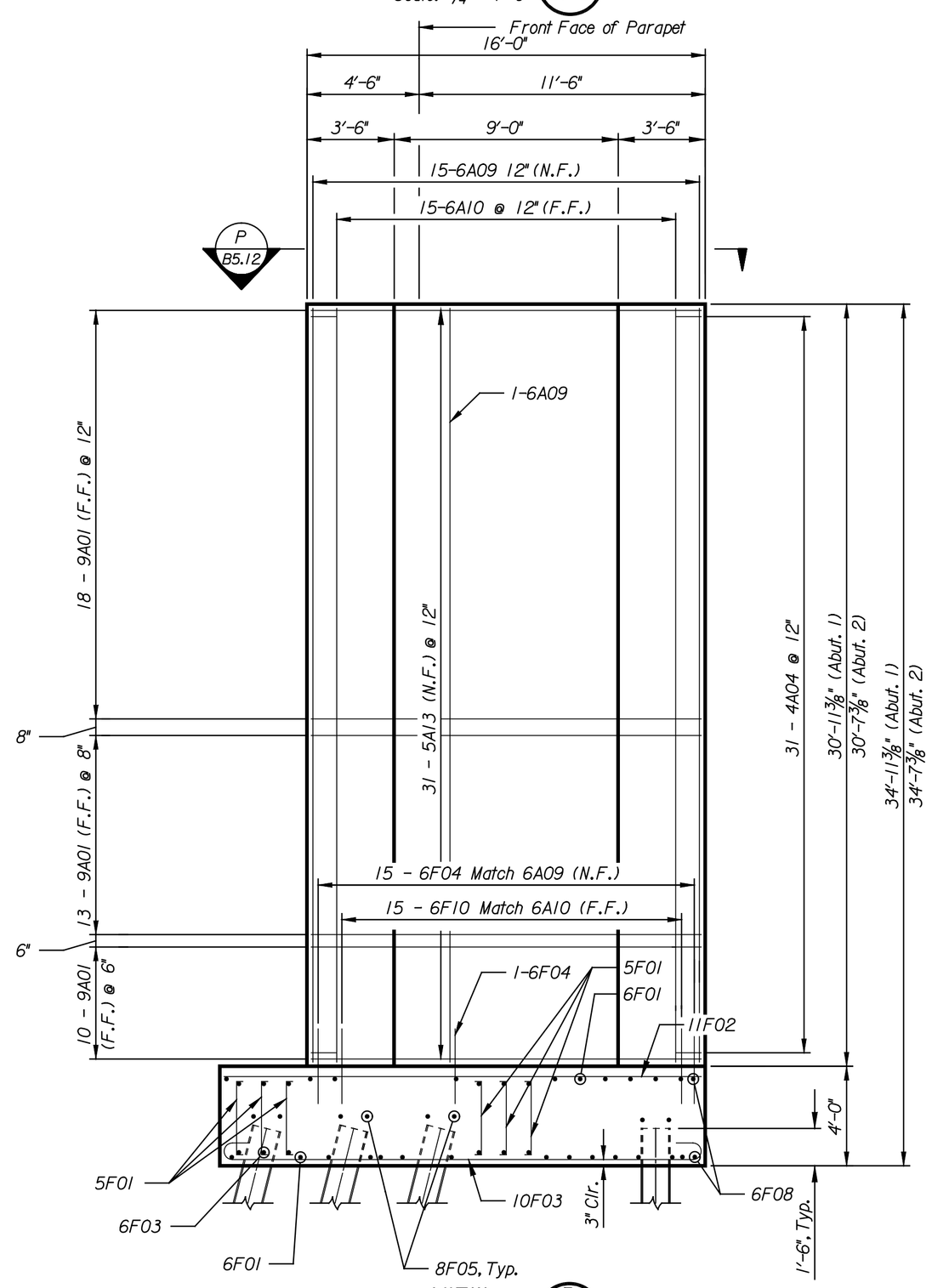

VIEW D
Scale: 1/4" = 1'-0" B5.6 B5.9

Abut. 2 Shown, Abut. 1 Similar

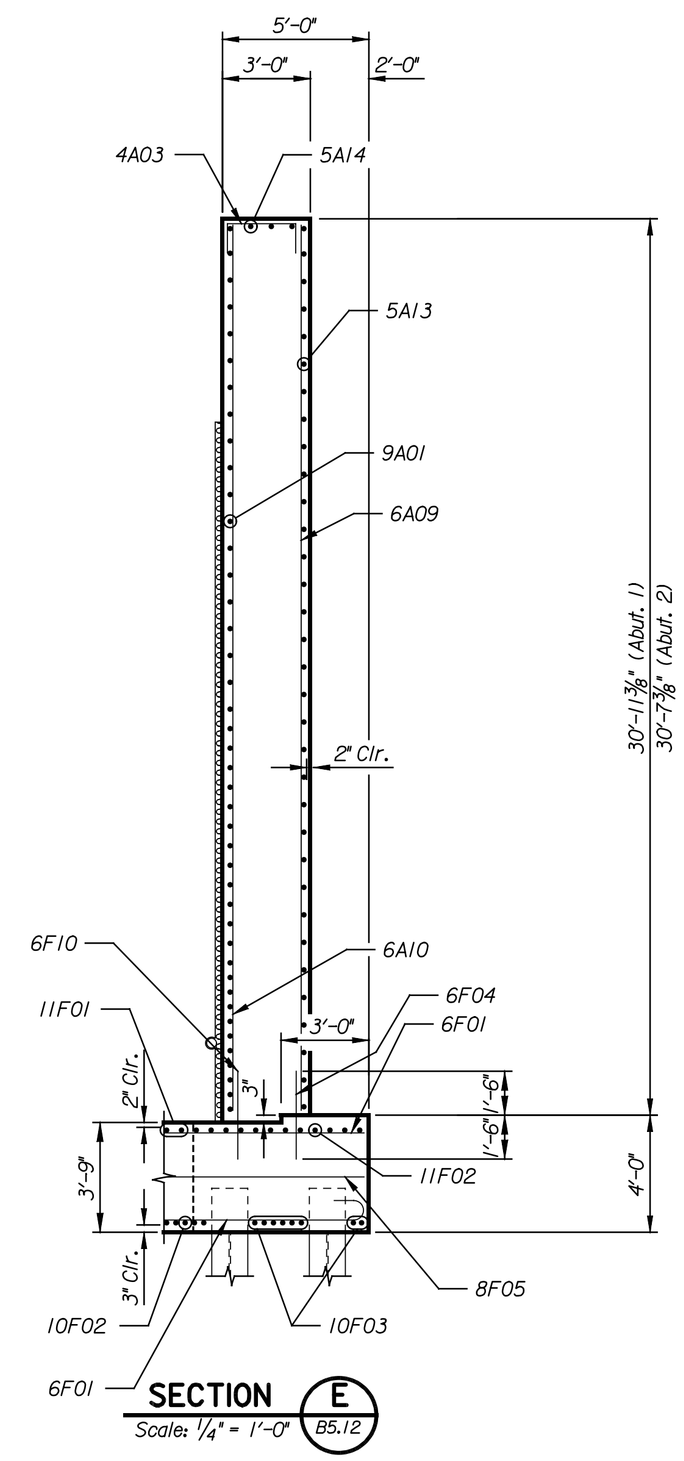

SECTION E
Scale: 1/4" = 1'-0" B5.12

Abut. 2 Shown, Abut. 1 Similar

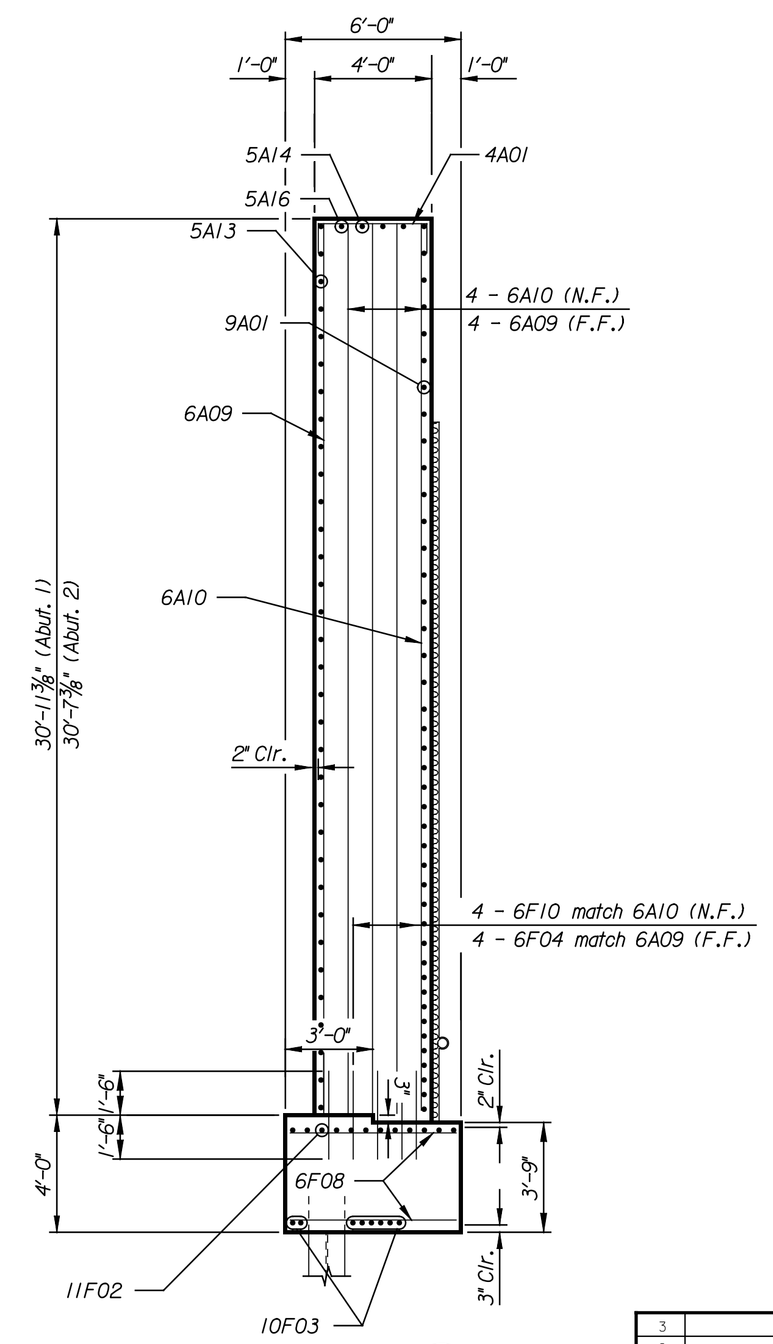

VIEW F
Scale: 1/4" = 1'-0" B5.12

Abut. 2 Shown, Abut. 1 Similar

NO.	DATE	REVISIONS	BY	APP'D
3				
2				
1				

CITY OF WICHITA
WICHITA CENTRAL CORRIDOR
2ND STREET
WINGWALL ELEVATION & DETAILS

SHEET NO.	OF	SCALE AS NOTED	APP'D				
DESIGNED	FKD	DETAILED	FWG	QUANTITIES	DJJ	TRACED	DJJ
DESIGN CK.	DMH	DETAIL CK.	EDY	QUAN.CK.	DMH	TRACE CK.	DMH

LOCATION:
BNSF BR. 212.0 LINE SEGMENT 7400
WICHITA, KS

This sheet designed by:

HNTB
ARCHITECTS ENGINEERS PLANNERS

DATE	BY

Plotted on: 06-JAN-2005 15:01 $times$
scindrell Plot Queue: $queues$
Plot Scale: $scales$ Pen Table: $pentables$
Design Filename: k:\h280409\Bridges\Dec2004\Base Bid\02nd5treet\drawings\sill.dgn.