STATE	PROJECT NO.	YEAR	SHEET NO.	TOTAL SHEETS
KANSAS	472-84071	2005	B5.19	

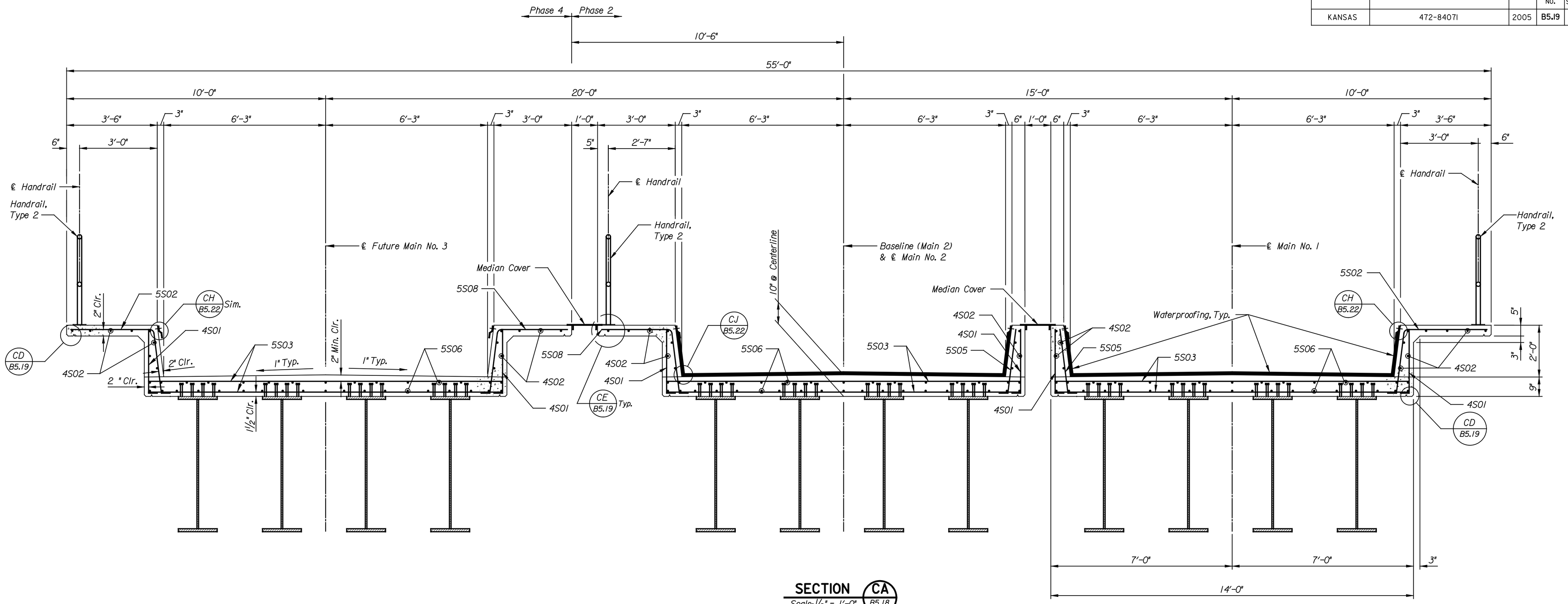

SECTION CA B5.18
Scale: 1/2" = 1'-0"

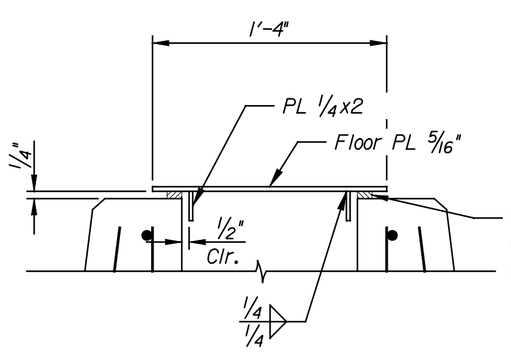

SECTION CB B5.18
Scale: 1½" = 1'-0"

Note:
Minimum Length of Median Cover Plate, 5'-0"
Maximum Length of Median Cover Plate, 8'-0"

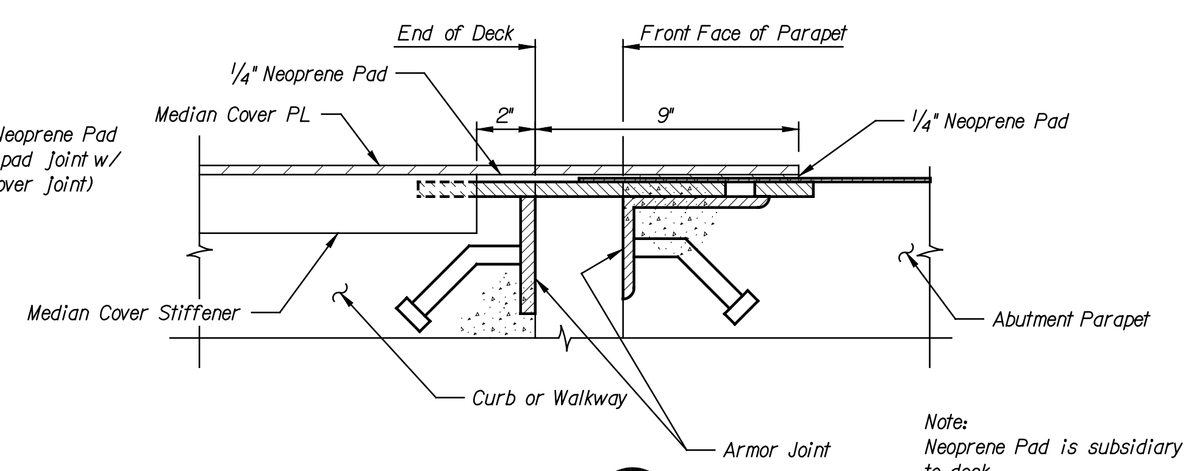

SECTION CC B5.18
Scale: 3" = 1'-0"

Note:
Neoprene Pad is subsidiary to deck.

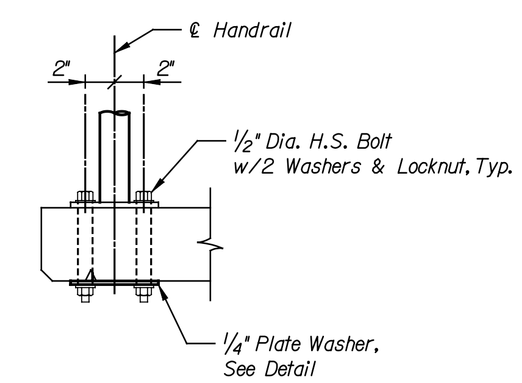

DETAIL CE B5.19
Scale: 1½" = 1'-0"

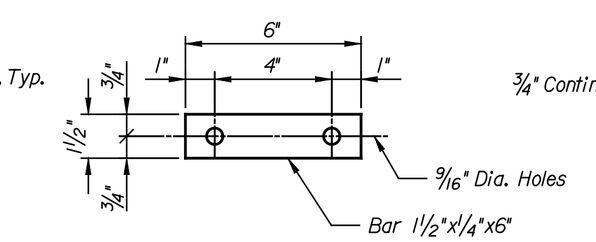

PLATE WASHER DETAIL
Scale: 3" = 1'-0"
Galvanize After Fabrication

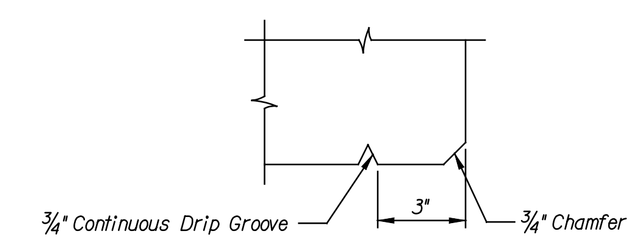

DETAIL CD B5.19
Scale: 3" = 1'-0"

NO.	DATE	REVISIONS	BY	APP'D
3				
2				
1				

CITY OF WICHITA
WICHITA CENTRAL CORRIDOR
2ND STREET
DECK SECTION & DETAILS

SHEET NO.	OF	SCALE AS NOTED	APP'D				
DESIGNED	FKD	DETAILED	DJJ	QUANTITIES	DJJ	TRACED	DJJ
DESIGN CK.	DMH	DETAIL CK.	JWH	QUAN.CK.	DMH	TRACE CK.	DMH

LOCATION:
BNSF BR. 212.0 LINE SEGMENT 7400
WICHITA, KS

This sheet designed by:

HNTB
ARCHITECTS ENGINEERS PLANNERS

DATE	BY

Plotted on: 06-JAN-2005 15:03 $times$
scindrell Plot Queue: $queue$
Plot Scale: $scale$ Pen Table: $pentable$
Design Filename: k:\298049\Bridges\Dec2004\Base Bid\02nd5treet\dr-awings\sl8.dgn.